Steel Square

AND ITS USES

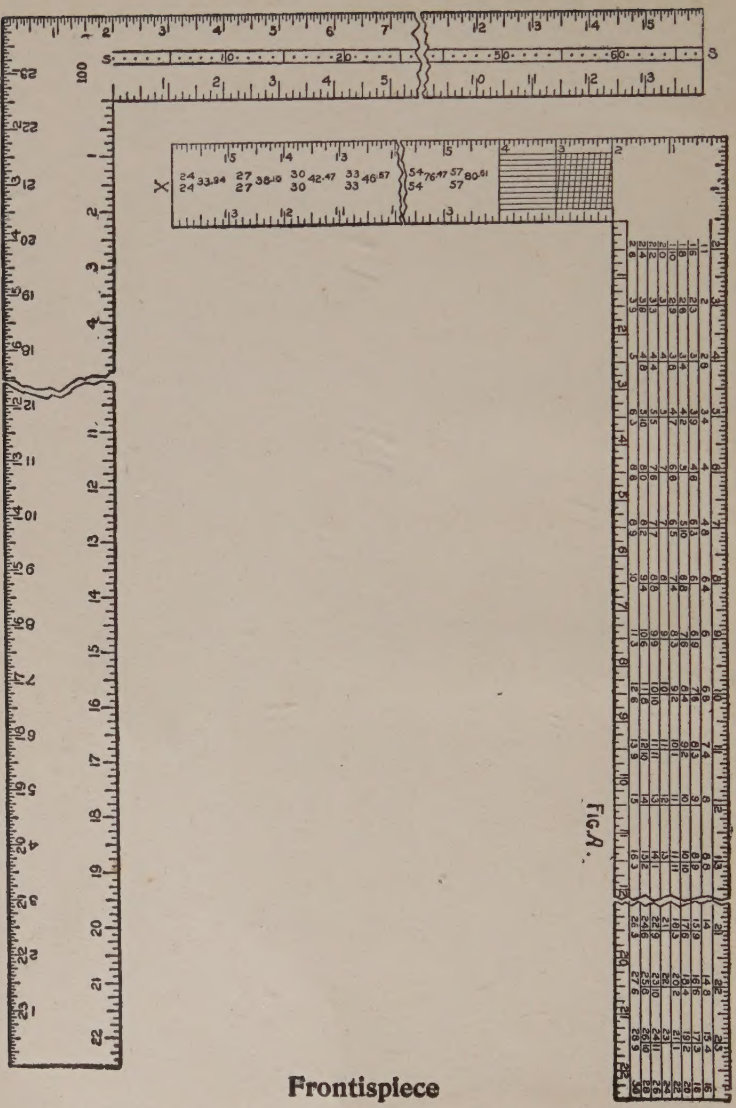

Fig. A.

Frontispiece

THE STEEL SQUARE
AND ITS USES

A Complete Up-to-Date Encyclopedia on the Practical Uses of the Steel Square, Showing How It Can Be Used by the Carpenter in His Daily Work, Together with a Detailed Discussion of the Various Devices Now on the Market Which Aim to Simplify the Work Which Can Be Done With This Wonderful Tool

---

TWO PARTS IN ONE VOLUME

Fully Illustrated

PART I

SHREWESBURY PUBLISHING CO.
5311 West Lake Street
CHICAGO, ILL.

Copyright 1925 by
SHREWESBURY PUBLISHING CO.

Made in U. S. A.

CONTENTS

PART I — Preliminary

What is Needed to Excel — Open Ways to Knowledge — The Finished Workman—Uses of the Steel Square 13

PART II — Historical and Descriptive

Square Used by Earliest Builders—Description of the Steel Square —How to Test the Square—Uses of the Figures, Lines and Scales—The Diagonal Scale—Board, Plank, and Scantling Measure—Brace Rule—Octagonal Scale 19

PART III — The Adjustable Fence

A Necessary Appendage—Application of the Fence—Formation of a Brace 33

PART IV — Roof Framing

Rafters—Laying Out a Rafter—Pitches and Fractions—How to Get the Bevels—Roof Pitches Explained—Reversed Pitches—Irregular, Uneven or Unequal Pitches—Projecting Cornices—To Find the Length of Rafters Where the Rises in the Roof are of Different Height—The Pitch of the Tower Roof—Hip Rafters—Length of Hip Rafters—How to Get the Inches and Fractions—Valley Rafters for Gables—Curved Hip Rafters —Common Rafters—To Find the Length and Cut of Rafters —The Measurement Line of Hips and Valleys—An Unequal Pitch—To Find the Length of the Jacks. 40

PART V—Hip Roof Framing

A Formula in Figures—Side Cut of the Hip—Beveling of Hip Rafter—To Cut Bed Moulds—The Principles to be Determined in a Hip Roof—To Find the Backing of a Hip Rafter—How to Find the Shoulder of Purlins—How to Pierce a Circular Roof With a Saddle Roof—Illustration of Roof Pitches—Reckoning by Degrees—Decimal Equivalents—Framing by Degrees—How to Find the Length of the Rafters to a Given Scale, Also the Bevels That Give the Cuts—Octagonal Roofs—Lengths and Bevels of Hips and Jacks—To Obtain Length of Various Rafters for Any Width of Building—Different Kinds of Jacks Described—Hexagonal Roofs—To Timber Hexagonal Roofs..... 79

PART VI—Hoppers and Hopper Bevels

Laying Out Hopper Bevels with a Square—The Various Classes of Hoppers—Methods of Finding the Bevels and Width of Sides and Ends of a Square Hopper—Rule for Finding the Bevels for the Butt Joint of the Hopper—Cuts and Bevels for Flaring Hopper—Angles and Bevels for Hopper Work—Miters—Methods of Finding the Miter—Trusses—Tower for Windmill, etc. 116

PART VII—Stair Building

How to Determine the Height and Run—Illustrations of the Pitch-Board—Open Strings—Risers and Treads—Housed or Closed Stairs—Other Methods of Making a Stair String—Connecting and Affixing Strings—Balusters—Brackets—Finish of Wall String at Foot of Stairs—Finish of Wall String at Top of Stairs—Open String at Foot of Stairs. 153

PART VIII — Combination Squares

Universal Square—Hight's Union Combination Square—Ideal Bevel Try-Square—Topp's Framing Tool 181

PART IX — Key to Steel Square

The Rafter Table — Lengths and Cuts for One-third Pitch — Side Cut of Jack — Side Cut of Octagon Jack — Side Cut of Hip or Valley — Table of Tangents — To Find Miter for any Regular Polygon — To Draw a Five-Pointed Star — To Frame Timbers at any Degree of Pitch — The Curve for an Octagon Hip — To Find Shape of Jack — To Find Backing for a Curved Hip 187

PART X — Possibilities of the Steel Square

Polygon Family Circle — Laying out a Circular Frame — Framing to Any Degree — Ornamental Figures in Miter Work — Arrangement of the Triangle — Application of Degrees — Drawing a Heptagon — Tangents and Co-Tangents — Degree Line of Triangle and Hexagon — Laying Off Degrees with Compasses — Foundation of Miters — Fractional Value of Decimals 209

PREFACE

The purpose of the present work is to supply the need for a complete treatise on the modern Steel Square, that wonder-working tool, a superior knowledge of which has enabled the American artisan to surpass his fellow workman of all other countries in the attainment of the highest standard of skill.

Many able articles on the uses and possibilities of the Steel Square have from time to time appeared in the leading mechanical and building journals of the country, and some of the more interesting and instructive of them have been republished in book form, together with much additional valuable information, specially prepared by the able authors and compilers of the books.

But this, it is believed, is the first attempt at supplying the demand for a complete and systematic treatise on the subject. The fundamental principles of the square are herein given in plain language, with explanatory illustrations, and so methodically arranged that every workman who makes use of the square can have easy access to such knowledge of its use as he may at any time require.

The aim has been to make the work not merely an instructive treatise, but a practical aid to those

who may have occasion to solve any problem within the possibilities of the Steel Square.

The application of the rules given for finding the lengths and bevels of boards and timbers, and for the various uses of roof framing, hopper work and stair building, is made so plain by means of simple language and graphic illustrations, as to enable the workman of average capacity to grasp the meaning at a glance.

The text is methodically arranged in progressive chapters, a full list of the contents of each chapter being given at its head. All the valuable helps and hints, and the rules and examples contained in the work, are plaecd under appropriate sub-headings, with index commencement words printed in bold-faced type, so that the eye of the reader can catch the particular information wanted at once.

Original illustrative diagrams, to the number of over two hundred, are contained in the work, including many full-page illustrations, communicating information in a manner as clear and distinct as it is interesting and instructive.

The collection of miscellaneous rules and examples given in Part II, illustrating uses of the square, is the most complete ever made. To make the rules of practical utility, one example under each rule is worked out, each distinct operation in the process being clearly shown by means of an illustrative diagram. Great care has been taken to secure absolute accuracy, and to plainly exhibit the practical application of

the principles of the square to the actual every-day problems of the carpenter and builder. It is hoped and earnestly believed, that in this treatise, the aspiring young artisan will find a helpful text-book of instruction, and the practical workman an up-to-date ready reference guide to the skillful use of the American artisan's most helpful constructive instrument — the modern Steel Square.

The department of Questions and Answers in Part II is one of the most useful, interesting and instructive parts of this work. In this part numerous questions, which have been sent the editors by practical carpenters all over the country, have been fully answered. They are questions which come up in your work every day, and the solutions of these practical problems here given will prove a valuable aid to you.

THE PUBLISHERS.

The Steel Square

And Its Uses

Part I

PRELIMINARY

What is Needed to Excel — Open Ways to Knowledge — The Finished Workman — Uses of the Steel Square

THERE is nothing of more importance to a young man who is learning the business of house-joinery and carpentry, than that he should make himself thoroughly conversant with the capabilities of the tools he employs. It may be that in some cases under the rules shown in this work the result can be obtained much more readily with other aids than the square; but the progressive mechanic will not rest satisfied with one method of performing operations when others are within his reach.

In the hand of the intelligent mechanic the square becomes a simple calculating machine of the most wonderful capacity, and by it he solves problems of the kinds continually arising in mechanical work, which by the ordinary methods are more difficult to perform.

What Is Needed to Excel.—The great improvement which the arts and manufactures have attained within the last fifty years, renders it essential that every person engaged therein should use his utmost exertions to obtain perfect knowledge of the trade he professes to follow. It is not enough, nowadays, for a person to have attained the character of a good workman; that phrase implies that quantum of excellence, which consists in working correctly and neatly, under the directions of others. The workman of to-day, to excel, must understand the principles of his trade, and be able to apply them correctly in practice. Such a one has a decided advantage over his fellow-workman; and if besides his superior knowledge he possesses a steady manner, and industrious habits, his efforts cannot fail of being rewarded.

It is no sin not to know much, though it is a great one not to know all we can, and put it all to good use. Yet, how few mechanics there are who will know all they can. Men apply for employment daily who claim to be finished mechanics and profess to be conversant with all the ins and outs of their craft, and who are noways backward in demanding the highest wages going, who, when tested, are found wanting in knowledge of the simplest formulas of their trade. They may, perhaps, be able to perform a good job of work after it is laid out for them by a more competent hand, they may have a partial knowledge of the uses and application of their tools; but, generally,

their knowledge ends here. Yet some of these men have worked at this trade or that for a third of a century, and are to all appearances, satisfied with the little they learned when they were apprentices. True, mechanical knowledge was not always so easily obtained as at present, for nearly all works on the constructive arts were written by professional architects, engineers, and designers, and however unexceptionable in other respects, they were generally couched in such language, technical and mathematical, as to be wholly unintelligible to the majority of workmen; and instead of acting as aids to the ordinary inquirer, they enveloped in mystery the simplest solutions of everyday problems, discouraging nine-tenths of the workmen on the very threshold of inquiry, and causing them to abandon further efforts to master the intricacies of their respective trades.

Open Ways to Knowledge.—Of late years a number of books have been published, in which the authors and compilers have made commendable efforts to simplify matters pertaining to the arts of carpentry and joinery, and the mechanic of today has not the difficulties of his predecessors to contend with. The workman of old could excuse his ignorance of the higher branches of his trade, by saying that he had no means of acquiring a knowledge of them. Books were beyond his reach, and trade secrets were guarded so jealously, that only a limited few were allowed to know them, and unless he was made of better stuff than

his fellow-workmen, he was forced to plod on in the same groove all his days.

Not so with the mechanic of today; if he is not well up in the minutiæ of his trade, he has but himself to blame, for although there is no royal road to knowledge, there are hundreds of open ways to obtain it; and the young mechanic who does not avail himself of one or other of these ways to enrich his mind, must lack energy, or be altogether indifferent about his trade, and may be put down as one who willl never make a workman.

The Finished Workman.—It has been thought that it would not be out of place to preface this work on the Steel Square, with the foregoing remarks, in the hope that they may stimulate the young mechanic, and urge him forward to conquer what at best are only imaginary difficulties. A willing heart and a clear head will most assuredly win honorable distinction in any trade, if they are only properly used. Indeed, during an experience of many years in the employment and superintendence of mechanics of every grade, from the green "wood-haggler" to the finished and accomplished workman, we have invariably discovered that the finished workman was the result of persistent study and application, and not, as is popularly supposed, a natural or spontaneous production. It is true that some men possess greater natural mechanical abilities than others, and consequently a greater aptitude in grasping the principles that underlie the construc-

tive arts; but as a rule, such men are not reliable; they may be expert, equal to any mechanical emergency and quick at mastering details, but they are seldom thorough, and never reliable where long-sustained efforts are required.

The mechanic who reaches a fair degree of perfection by experience, study and application, is the man who rises to the surface, and whose steadiness and trustworthiness force themselves on the notice of employers and superintendents. We have said this in order to give encouragement to those young mechanics who find it uphill work to master the intricacies of the various arts they are engaged in, for they may rest assured that in the end work and application will be sure to win; and we are certain that a thorough study of the Steel Square and its capabilities will do more than anything else to aid the young workman in mastering many of the mechanical difficulties that will confront him from time to time in his daily occupation.

Uses of the Steel Square.—It must not be supposed that the work here presented exhausts the subject. The enterprising mechanic will find opportunity for using the square in the solution of many problems that will crop up during his daily work, and the principles herein laid down will aid very much towards correct solutions. In framing roofs, bridges, trestle-work, and constructions of timber, the Steel Square is a necessity to the American carpenter; but only a few of the more intelligent workmen ever use it for

other purposes than to make measurements, lay off the mortices and tenons, and square over the various joints. Now, in framing bevel work of any description, the square may be used with great advantage and profit. Posts, girts, braces, and struts of every imaginable kind may be laid out by this wonderful instrument, if the operator will only study the plans with the view of making use of his square for obtaining the various bevels, lengths and cuts required to complete the work in hand. Tapering structures—the most difficult the framer meets with—do not contain a single bevel or length that cannot be found by the square when properly applied, and it is this fact we wish to impress on our readers, for it would be impossible in this work, to give every possible application of the square to work of this kind. We have therefore, only given such examples as will enable any one to apply some one of them to any work in hand.

Doubtless, in the early ages of mankind, when solid structures became a necessity, the want of an instrument similar to a square must have been felt at every "turn and corner," and there can be no question about one having been used—rude and imperfect perhaps—in erecting the first square or rectangular building that was ever built on this earth.

Part II

HISTORICAL AND DESCRIPTIVE

Square Used by Earliest Builders—Description of the Steel Square—How to Test the Square—Uses of the Figures, Lines and Scales—The Diagonal Scale—Board, Plank, and Scantling Measure—Brace Rule—Octagonal Scale

Square Used by the Earliest Builders.—The Greeks, who were an inventive people, and who were apt to ascribe to themselves more credit than was really their due, in the way of inventions and discoveries, lay claim to be the inventors of the instrument. Pliny says that Theodorus, a Greek of Samos, invented the square and level. Theodorus was an artist of some note, but it is evident that the square and level, in some form or other, were used long before his time, even in his own country, for some of the finest temples in Athens and other Grecian cities, had been built long before his time; and the Pyramids of Egypt were hoary with age when he was in swaddling cloths. Indeed, the "square," as a constructive tool, must of necessity have found a place in the "kit" of the earliest builders. Evidences of its presence have been found in the ruins of prehistoric nations, and are abundant in the remains of ancient Petra, Ninevah, Babylon, Etruria, and India. South American ruins of great antiquity in Brazil, Peru, and other places, show that the

unknown races that once inhabited the South American Continent, were familiar with many of the uses of the square. Egypt, however, that cradle of all the arts, furnishes us with the most numerous, and, perhaps, the most ancient evidences of the use of the square; paintings and inscriptions on the rock-cut tombs, the temples, and other works, showing its use and application, are plentiful. In one instance, a whole "kit" of tools was found in a tomb at Thebes, which consisted of mallets, hammers, bronze nails, small tools, drills, hatchets, adzes, squares, chisels, etc.; one bronze saw and one adze have the name of Thothmes III, of the 18th dynasty stamped on their blades, showing that they were made nearly 3,500 years ago. The constructive and decorative arts at that time were in their zenith in Egypt, and must have taken at least 1,000 years to reach that stage. Consequently, the square must have been used by the workmen of that country, at least, four thousand years ago.

The British Museum contains many tools of pre-historic origin, and the square is not the least of them. Herculaneum and Pompeii contribute evidences of the importance of this useful tool. On some of the paintings recently discovered in those cities, the different artisans can be seen at work in their own workshops, with their work benches, saw-horses, tools, and surroundings, much about the same as we would find a small carpenter shop of today, where all the work is done by hand; the only difference being a change

in the form of the tools, which, in some instances, had been better left as these old workmen devised them.

It can make no difference, however, to the modern workman, as to when or where the square was first used; suffice to know, that at present, we have squares immensely superior to anything known to the ancients, and it may be added, that so perfect has the machinery for the manufacture of steel squares become, that a defective tool is now the exception. Of course this relates to the products of manufacturers of repute, and not to the cheap squares, or to those said to be first class, that were made ten or fifteen years ago. The tool we recommend in this book is the best made, both as to quality of material, accuracy of workmanship, and amount of useful matter on its faces.

Description of the Square.—In the foregoing sketch we have given a few hints as to the kind of square to buy; in many cases, however, this book will find its way into the hands of mechanics and others, who have old and favorite squares in their chests or workshops, and who will not care to dispose of a "well tried friend" for the purpose of filling its place with another simply because we have recommended it. To these workmen we would say we do not advise a change provided the old square is true, and the inches and sub-divisions are properly and accurately defined. We wish it distinctly understood that old squares, if true, and marked with inches and sub-divisions

of inches, will perform nearly every solution presented in this book.

The lines and figures formed on the squares of different make, sometimes vary, both as to their position on the square, and their mode of application, but a thorough understanding of the application of the scales and lines shown on any first-class tool, will enable the student to comprehend the use of the lines and figures exhibited on other first-class squares.

To insure good results, it is necessary to be careful in the selection of the tool.

The blade of the square should be 24 inches long, and two inches wide, and the tongue from 14 to 18 inches long and $1\frac{1}{2}$ inches wide. The tongue should be exactly at right angles with the blade, or in other words the "square" should be perfectly square.

How to Test the Square.—To test this question, get a board, about 12 or 14 inches wide, and four feet long, dress it on one side, and true up one edge as near straight as it is possible to make it. Lay the board on the bench, with the dressed side up, and the trued edge toward you, then apply the square, with the blade to the left, and mark across the prepared board with a penknife blade, pressing close up to the edge of the tongue, and then reverse the square, and move it until the tongue is close up to the knife mark; if you find that the edge of the tongue and the mark coincide, it is a proof that the tool is correct enough for your purposes.

This, of course, relates to the inside edge of the blade, and the outside edge of the tongue. If these edges should not be straight or should not prove perfectly true, they should be filed or ground until they are straight or true. The outside edge of the blade should also be "trued" up to make it exactly parallel with the inside edge, if such is required. The same process should be gone through on the tongue. As a rule, squares made by firms of repute are perfect, and require no adjusting; nevertheless, it is well to make a critical examination before purchasing.

Use of the Figures, Lines, and Scales.—The next thing to be considered is the use of the figures, lines, and scales, as exhibited on the square. It is supposed that the ordinary divisions and sub-divisions of the inch, into halves, quarters, eighths, and sixteenths are understood by the student; and that he also understands how to use that part of the square that is sub-divided into twelfths of an inch. This being conceded, we now proceed to describe the various rules as shown on all good squares; but before proceeding further, it may not be out of place to state, that on the tool recommended in this book, one edge is subdivided into thirty-seconds of an inch.

This fine sub-division will be found very useful, particularly so when used as a scale to measure drawings made in half, quarter, one-eighth, or one-sixteenth of an inch to the foot.

The Diagonal Scale.—In Fig. 1 we show a diagram of the diagonal scale enlarged and lettered for this occasion; and we may here state that the workman will find no difficulty in adapting the diagrams and what follows to the scale as depicted on his own square.

From the numerous inquiries we have had we are led to believe that the diagonal scale, of which the accompanying figure is a diagram, is not so well understood or appreciated as it ought

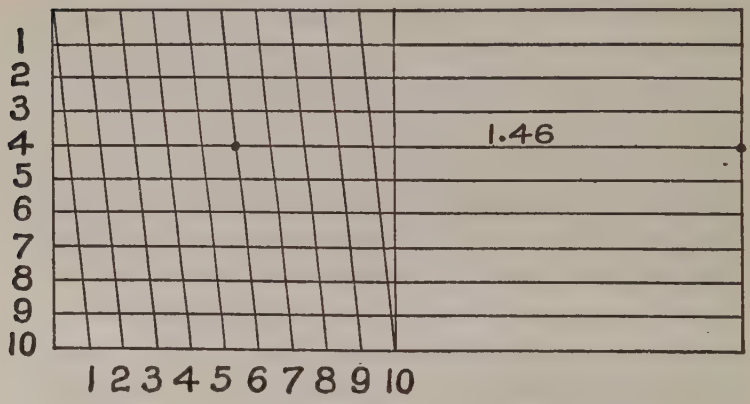

FIG. 1

to be, which is certainly to be regretted. This scale is for minute measurements, and when a thorough knowledge of its properties is understood, it is not a very difficult operation to so employ it that the 100th part of an inch may be obtained, and for practical workman this is minute enough, though to the advanced scientist this would be a trifling operation, when such minute

measurements are used as the 5000th part of an inch.

In actual practice the scale is never used to find the smaller measurements, but it may sometimes happen that the workman may want to measure a plan or take a distance on a map very accurately, then a fine subdivision will be found useful.

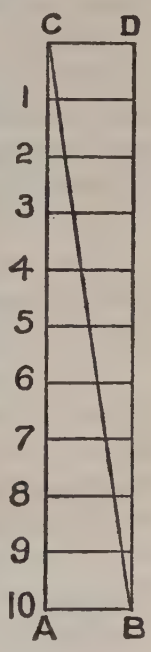

FIG. 2

In order to give the reader a fair understanding of the principles on which this scale is founded, we illustrate its construction and the manner in which it is used, and in doing so, for convenience sake, quote from an excellent authority on the subject: "Let us draw a diagram Fig. 2, say three times the size of the first division of the scale as shown on the square. Imagine the short distance from A to B to represent ten inches; it will be evident to any one that to divide that short space into ten equal parts would simply confuse the whole diagram; but if we adopt another plan and divide into ten equal parts its length, as shown, and then draw a diagonal line from B to C, we have the distance AB divided into ten parts.

The numbers shown in the diagram indicate the fractional parts of the line A B, and if we take our compasses and place one leg on the line A C, at number 5, and the other leg where the diagonal

line cuts the line 5, that distance will be found to be just one-half of the distance between A and B. There is a difference of one-tenth of the whole distance between A B, at every point where the diagonal cuts the cross lines. Or in other words where the diagonal crosses the horizontal lines, the point of juncture is one inch nearer to the line A C, than the next point lower down.

This is the principle on which the diagonal scale is based, and it will be seen that any fraction of a foot or an inch may be so divided by diagonals that the most minute subdivisions may be obtained.

The measurements, of course, are always taken along the horizontal lines, and measured from the perpendicular to the diagonal.

With a thorough knowledge of the foregoing, it will be easy to understand that the perpendicular is not necessarily limited. It may be made twice or four times the length, and divided into twice or four times the number of parts which would render the diagram to make reading of 200ths and 400ths respectively.

If twelfths of an inch or foot are wanted, all that is required is to divide the height into twelve parts instead of ten, draw the diagonal and the twelfths are there.

In using this scale let us examine it in Fig. 1, and we will see that the other divisions are in inches, so to apply the rule we proceed as follows: For instance, we want one inch and forty-six one-hundredths, place one leg of the compasses on

the one inch mark and the other leg where the diagonal cuts the line at 4, on the sixth division up. This gives the length required.

The foregoing description and explanation apply to the diagonal scale, as well as to the scale on a steel square, and generally accompanies a case of drawing instruments.

It may be well to state here that some new squares recently placed on the market, claim special features in the way of rafter tables, etc., but their scope in this direction is limited and cannot contain the general information that may be obtained from the Standard Steel Square as herein described.

Board, Plank and Scantling Measure.—Perhaps, with the single exception of the common inch divisions on the square, no set of figures on the instrument will be found more useful to the active workman than that known as the board rule. A thorough knowledge of its use may be obtained by ten minutes study, and, when once obtained, is always at hand and ready for use.

The following explanations are deemed sufficiently clear to give the reader a full knowledge of the workings of the rule. If we examine the Fig. A, in the Frontispiece, we will find under the figure 12, on the outer edge of the blade, where the length of the boards, plank, or scantling to be measured, is given, and the answer in feet and inches is found under the inches in width that the board, etc., measures. For example, take a board nine feet long and five inches wide;

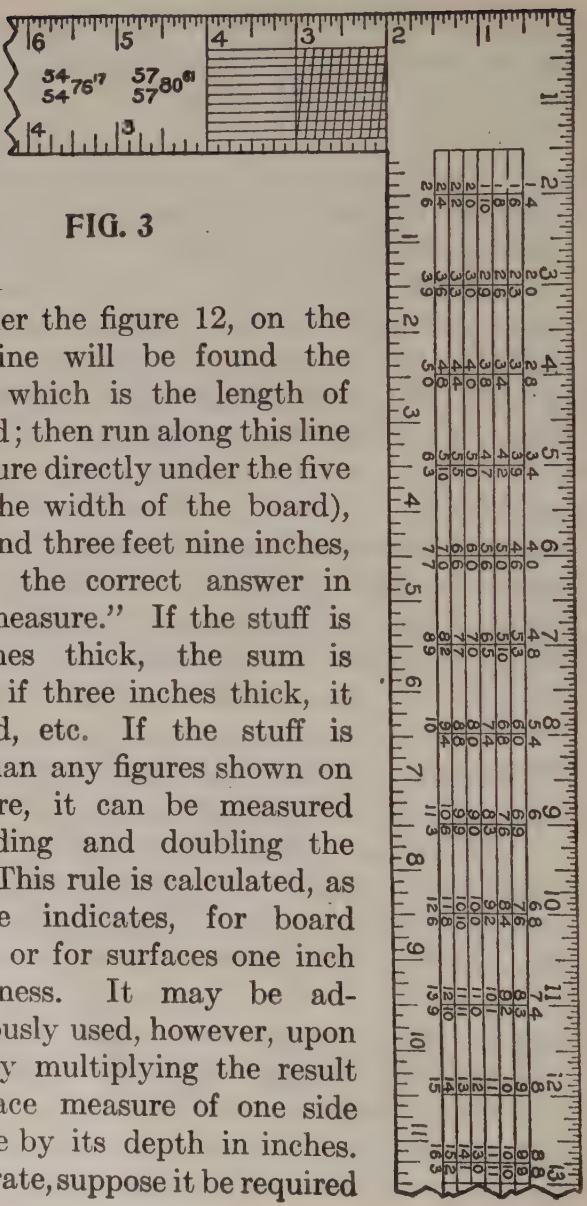

FIG. 3

then under the figure 12, on the second line will be found the figure 9, which is the length of the board; then run along this line to the figure directly under the five inches (the width of the board), and we find three feet nine inches, which is the correct answer in "board measure." If the stuff is two inches thick, the sum is doubled; if three inches thick, it is trebled, etc. If the stuff is longer than any figures shown on the square, it can be measured by dividing and doubling the result. This rule is calculated, as its name indicates, for board measure, or for surfaces one inch in thickness. It may be advantageously used, however, upon timber by multiplying the result of the face measure of one side of a piece by its depth in inches. To illustrate, suppose it be required

to measure a piece of timber 25 feet long, 10 by 14 inches in size. For the length we will take 12 and 13 feet. For the width we will take 10 inches, and multiply the result by 14. By the rule a board 12 feet long and 10 inches wide contains 10 feet, and one 13 feet long and 10 inches wide, 10 feet 10 inches. Therefore, a board 25 feet long and 10 inches wide must contain 20 feet and 10 inches. In the timber, above described, however, we have what is equivalent to 14 such boards, and therefore we multiply the result by 14, which gives 291 feet and 8 inches, the board measure.

Fig. 3 shows the method now in use for board measure. This shows the correct contents in feet and inches. It is a portion of the blade of the square, as shown in the Frontispiece.

Brace Rule.—The "brace rule" is always placed on the tongue of the square, as shown in the central space at x in Fig. A, Frontispiece.

This rule is easily understood; the figures on the left of the line represent the "run" or the length of the two sides of a right angle, while the figures on the right represent the exact length of the third side of a right-angled triangle, in inches, tenths, and hundredths. Or, to explain it in another way, the equal numbers placed one above the other, may be considered as representing the sides of the square, and the third number to the right the length of the diagonal of that square. Thus the exact length of a brace from point to point having a run of 33 inches on a

post and a run of the same on a girt, is 46.67 inches. The brace rule varies somewhat in the matter of the runs expressed in different squares. Some squares give a few brace lengths of which the runs upon the post and beam are unequal.

Octagonal Scale.—The "octagonal scale," as shown on the central division of the upper portion of blade, is on the opposite side of the square to the "brace rule," and runs along the center of the tongue as at S S in Frontispiece. Its use is as follows: Suppose a stick of timber ten inches square. Make a center line, which will be five inches from each edge; set a pair of compasses, putting one leg on any of the main divisions shown on the square in this scale, and the other leg on the tenth subdivision. This division, pricked off from the center line on the timber on each side, will give the points for the gauge-lines. Gauge from the corners both ways, and the lines for making the timber octagonal in its section are obtained. Always take the same number of spaces on your compasses as the timber is inches square from the center line. Thus, if a stick is twelve inches square, take twelve spaces on the compasses; if only six inches square, take six spaces on the compasses, etc. The rule always to be observed is as follows: Set off from each side of the center line upon each face as many spaces by the octagon scale as the timber is inches square. For larger timbers than the number of divisions in the scale, the measurements by it may be doubled, or trebled, as the case may be.

The diagram, Fig. 4, shows the application of the rule applied to the end of a stick of timber or on a plane surface. Let B C D E, be the square equal to six inches on a side. Draw the center lines, B C, and D E, then with the dividers

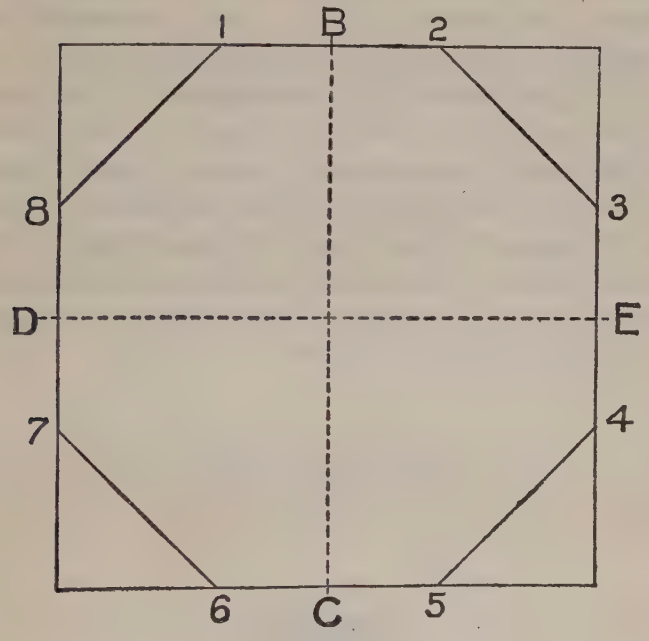

FIG. 4

take from the scale six parts, and lay off this distance from the center of each; as B1, B2, E3 and E4, C5 and C6, D7 and D8. Draw lines from 1 to 8, 2 to 3, 4 to 5, 6 to 7, and the octagon figure is complete.

A rule for laying off octagons is figured on nearly all carpenter's two-foot rules, marked off

from the inner edges of the rule; one set of figures is denoted by the letter E, another set is denoted by the letter M. The set marked E measures the distance from the edge of the square to the points indicated in the diagram, by the figures 1, 2, 3, 4, etc. The set marked M is used for finding the points 1, 2, 3, 4, etc., by measuring from the middle or center lines, B, E, C, D.

We have now fully described all the lines, figures, and scales that are usually found on the better class of squares now in use; but we may as well remark here that there are squares in use of an inferior grade, that are somewhat differently figured. These tools, however, are such as cannot be recommended for the purposes of the scientific carpenter or joiner.

Part III

THE ADJUSTABLE FENCE

A Necessary Appendage—Application of the Fence—Formation of a Brace

A Necessary Appendage to the steel square in solving mechanical problems, is what we call, for want of a better name, an adjustable fence. This is made out of a piece of hardwood 2 inches wide, and 2 feet 10 inches long (being cut so that it will pack in a tool chest), and $1\frac{5}{8}$ inches thick; run a gauge line down the center of both edges; this done, run a saw kerf cutting down these gauge lines at least one foot from each end, leaving about ten inches of solid wood in

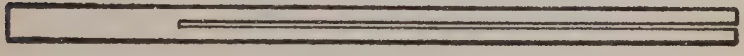

FIG. 5

the center of fence. We now take our square and insert the blade in the saw kerf at one end of the fence, and the tongue in the kerf, at the other, the fence forming the third side of a right-angled triangle, the blade and the tongue of the square forming the other two sides. A fence may be made to do pretty fair service, if the saw kerf is all cut from one end as shown in Fig. 5. The next step will be to make provision for hold-

ing the fence tight on the square; this is best done by putting a No. 10, 1½-inch screw in each end of the fence, close up to the blade and tongue; having done this, we are ready to proceed to business.

Application of the Fence.—The fence being made as desired, in either of the methods mentioned, and adjusted to the square, work can be commenced forthwith.

The first attempt will be to make a pattern for a brace, for a four-foot "run." Take a piece

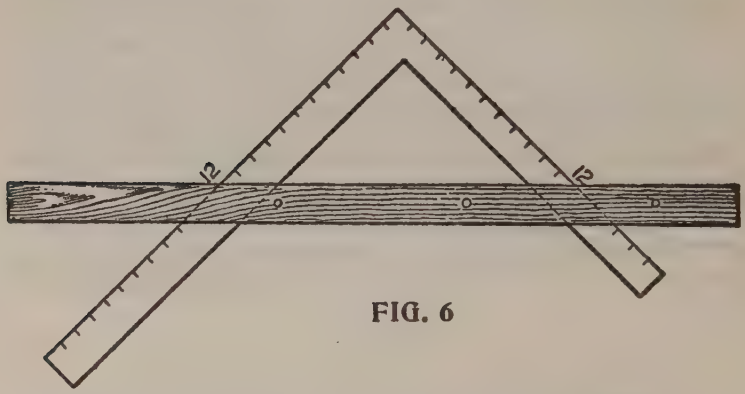

FIG. 6

of stuff already prepared, six feet long, four inches wide and a half-inch thick.

Take the square as arranged at Fig. 6, and place it on the prepared stuff as shown in Fig. 7. Adjust the square so that the twelve-inch lines coincide exactly with the gauge line 0, 0, 0, 0. Hold the square firmly in the position now obtained, and slide the fence up the tongue and blade until it fits snugly against the jointed

edge of the prepared stuff, screw the fence tight on the square, and be sure that the 12-inch marks on both the blade and the tongue are in exact position over the gauge-line.

We are now ready to lay out the pattern. Slide the square to the extreme left, as shown on the dotted lines at X, mark with a knife on the outside edges of the square, cutting the gauge-

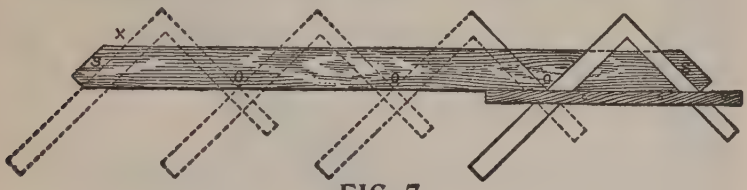

FIG. 7

line. Slide the square to the right until the 12-inch mark on the tongue stands over the knife mark on the gauge line; mark the right hand side of the square, cutting the gauge line as before, repeat the process four times, marking the extreme ends to cut off, and we have the length of the brace and the bevels.

Square over, at each end from the gauge line, and we have the toe of the brace. The lines, S, S, shown at the ends of the pattern, represent the tenons that are to be left on the braces. This pattern is now complete; to make it handy for use, however, nail a strip 2 inches wide on its edge, to answer for a fence and the pattern can then be used either side up.

Formation of a Brace.—The cut in Fig. 8, shows the brace in position, on a reduced scale.

The principle on which the square works in the formation of a brace can easily be understood from this cut, as the dotted lines show the posi-

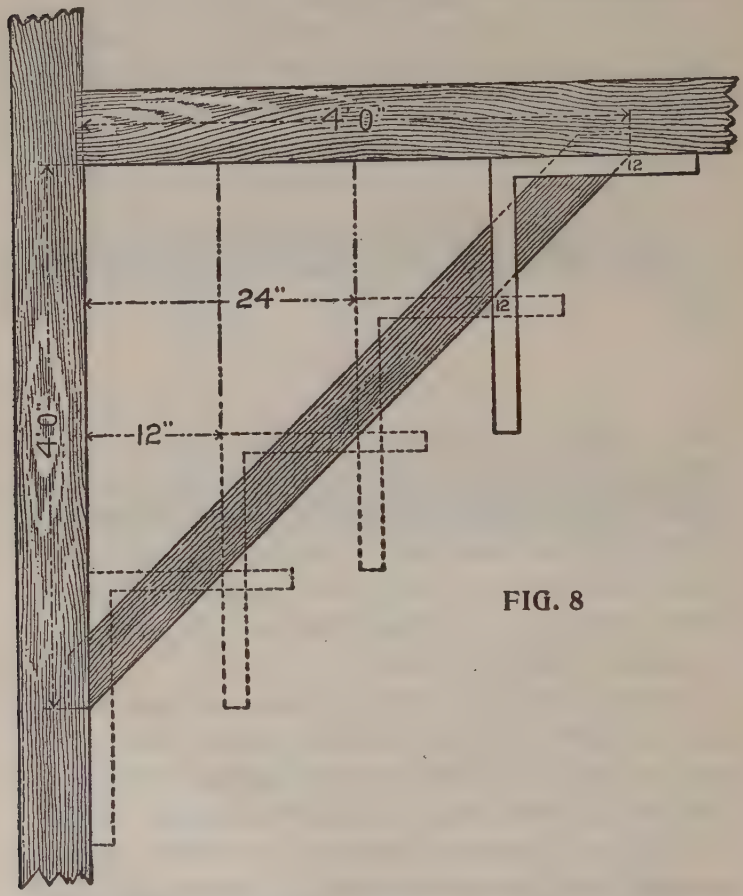

FIG. 8

tion the square was in when the pattern was laid out.

It may be necessary to state that the "square," as now arranged, will lay out a brace pattern

for any length, if the angle is right and the runs equal. Should the brace be of great length, however, additional care must be taken in the adjustment of the square, for should there be any departure from truth, that departure will be repeated every time the square is moved, and where it would not affect a short run, it might seriously affect a long one.

To lay out a pattern for a brace where the run on the beam is three feet, and the run down the post four, proceed as follows: Prepare a

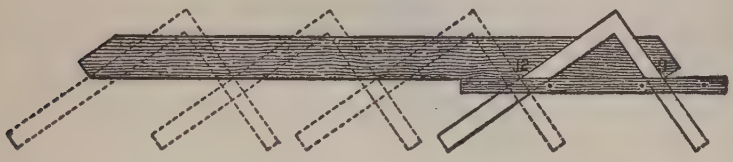

FIG. 9

piece of stuff, same as the one operated on for a four-foot run; joint and gauge it. Lay the square on the left-hand side, keep the 12-inch mark on the tongue, over the gauge line, place the nine-inch mark on the blade, on the gauge line, so that the gauge line forms the third side of the right-angled triangle, the other sides of which are nine and twelve inches respectively.

Now proceed as on the former occasion, and as shown in Fig. 9, taking care to mark the bevels at the extreme ends. The dotted lines show the positions of the square, as the pattern is being laid out.

Fig. 10 shows the brace in position, the dotted lines show where the square was placed on the

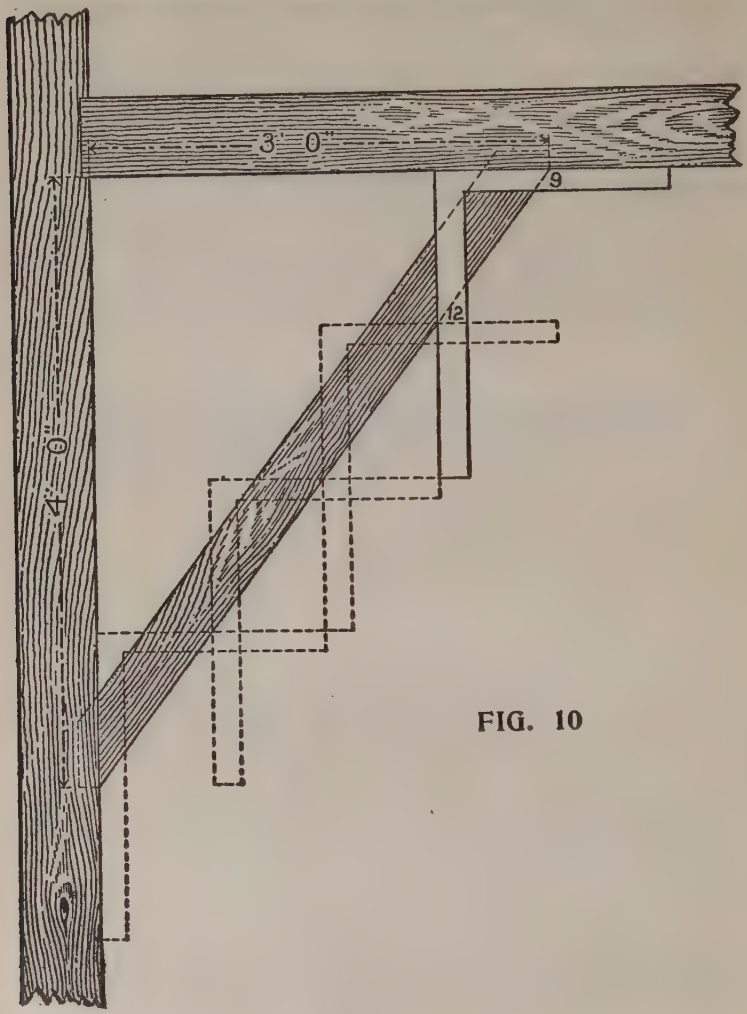

FIG. 10

pattern. It is well to thoroughly understand the method of obtaining the lengths and bevels of

irregular braces. A little study will soon enable any person to make all kinds of braces.

If we want a brace with a two-foot run, and a four-foot run, it must be evident that, as two is the half of four, so on the square take 12 inches on the tongue, and six inches on the blade, apply four times, and we have the length, and the bevels of a brace for this run.

For a three by four-foot run, take 12 inches on the tongue, and 9 inches on the blade, and apply four times, because, as 3 feet is $\frac{3}{4}$ of four feet, so 9 inches is $\frac{3}{4}$ of 12 inches.

Part IV

ROOF FRAMING

Rafters—Laying Out a Rafter—Pitches and Fractions—How to Get the Bevels—Roof Pitches Explained—Reversed Pitches—Irregular, Uneven or Unequal Pitches—Projecting Cornices—To Find the Length of Rafters Where the Rises in the Roof are of Different Height—The Pitch of the Tower Roof—Hip Rafters—Length of Hip Rafters—How to Get the Inches and Fractions—Valley Rafters for Gables—Curved Hip Rafters—Common Rafters—To Find the Length and Cut of Rafters The Measurement Line of Hips and Valleys—An Unequal Pitch—To Find the Length of the Jacks

Rafters.—Fig. 11 shows a plan of a roof, having twenty-six feet of span. The span of a roof is the distance over the wall plates measuring from A to A, as shown in Fig. 11. It is also

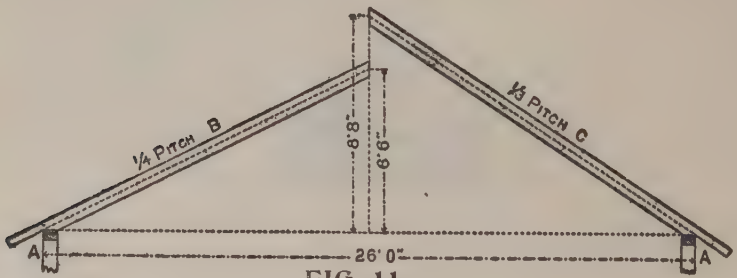

FIG. 11

the extent of an arch between its abutments.

There are two rafters shown in position in Fig. 11. The one on the left is at an inclination of quarter pitch, and marked B, and the one on

the right, marked C, has an inclination of one-third pitch. These angles or inclinations rather, are called quarter and third pitch, respectively, because the height from level of wall plates to ridge of roof is one-quarter or one-third the width of building, as the case may be.

In Fig. 12, the rafter B is shown drawn to a larger scale; you will notice that this rafter is for quarter pitch, and for convenience, it is supposed to consist of a piece of stuff 2 inches by 6 inches

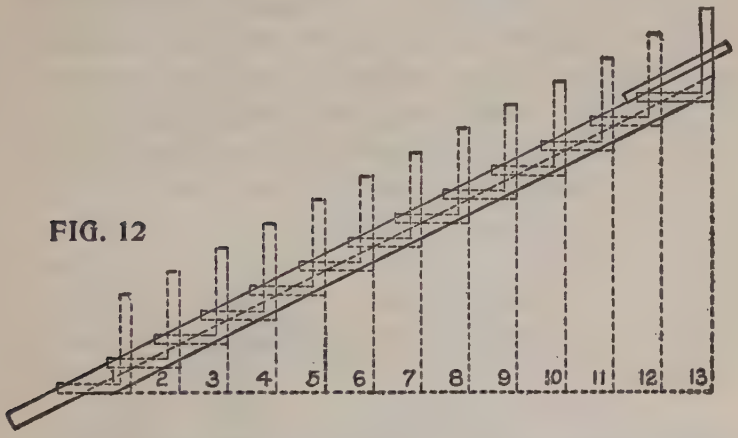

FIG. 12

by 17 feet. That portion of the rafter that projects over the wall of the building, and forms the eave, is any width desired. The length of the projecting piece in this case is one foot—it may be more or less to suit the eave, but the line must continue from end to end of the rafter, as shown on the plan, and we will call this line our working line.

Laying out a Rafter.—We are now ready to lay out this rafter, and will proceed as follows:

We adjust the fence on the square the same as for braces, press the fence firmly against the top edge of rafter, and place the figure 12 inches on the left hand side, and the figure 6 inches on the right-hand side, directly over the working line, as shown on the plan. Be very exact about getting the figures on the line, for the quality of the work depends much on this; when you are satisfied that you are right, screw your fence tight to the square. Commence on No. 1 on the left, and mark off on the working line; then slide your square to No. 2, repeating the marking and continue the process until you have measured off thirteen spaces, the same as shown by the dotted lines in the drawing. The last line on the right-hand side will be the plumb cut of the rafter, and the exact length required, which will be found to be 14 feet 6½ inches plus the projection given the eave. It will be noticed that the square has been applied to the timber thirteen times.

The reason for this is, that the building is twenty-six feet wide, the half of which is thirteen feet, the distance that one rafter is expected to reach, so, if the building was thirty feet wide, we should be obliged to apply the square fifteen times instead of thirteen. We may take it for granted, then, that in all cases where this method is employed to obtain the lengths and bevels, or cuts of rafters, we must apply the square half as many times as there are feet in the width of the building being covered. If the building

to be covered is one-third pitch, all to be done is to take 12 inches on one side of the square and 8 inches on the other and operate as for quarter pitch.

We shall frequently meet with roofs much more acute than the ones shown, but it will be easy to see how they can be managed. For instance, where the rafters are at right-angles to each other, apply the square the same as for braces of equal runs, that is to say, keep the 12 mark on the blade, and the 12 mark on the tongue, on the working line. When the roof is more acute, or "steeper" than a right-angle, take a greater figure than twelve on one side of the square, and twelve on the other.

Whenever a drawing of a roof is to be followed, we can soon find out how to employ the square,

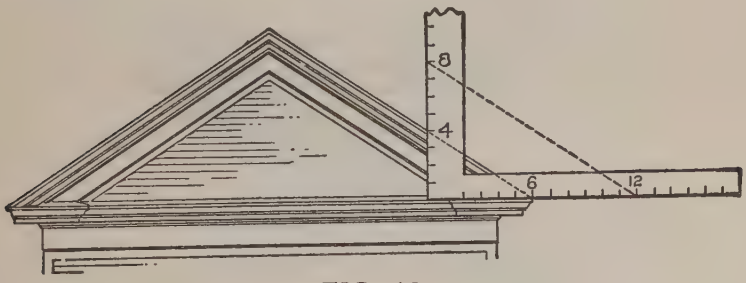

FIG. 13

by laying it on the drawing, as shown in Fig. 13. Of course, something depends on the scale to which the drawing is made. If any of the ordinary fractions of an inch are used, the intelligent workman will have no difficulty in discovering

what figures to make use of to get the "cuts" and lengths desired.

Pitches and Fractions.—Sometimes there may be a fraction of a foot in this division; when such

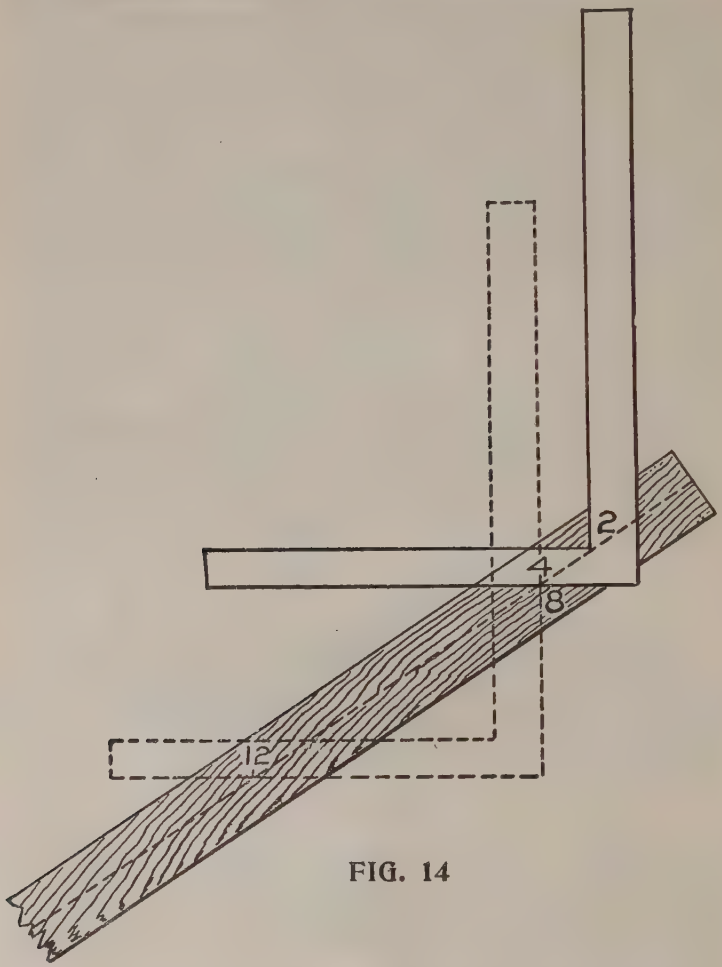

FIG. 14

is the case, it can be dealt with as follows: Suppose there is a fraction of a foot in the span, say 8

inches, the half of which would be 4 inches, or one-third of a foot; then if the roof is quarter pitch, all to be done is to place the square, with the 4-inch mark on the tongue, and the 2-inch mark on the blade, on the center line of the rafter, and the distance between these points is the extra length required, and the line down the blade

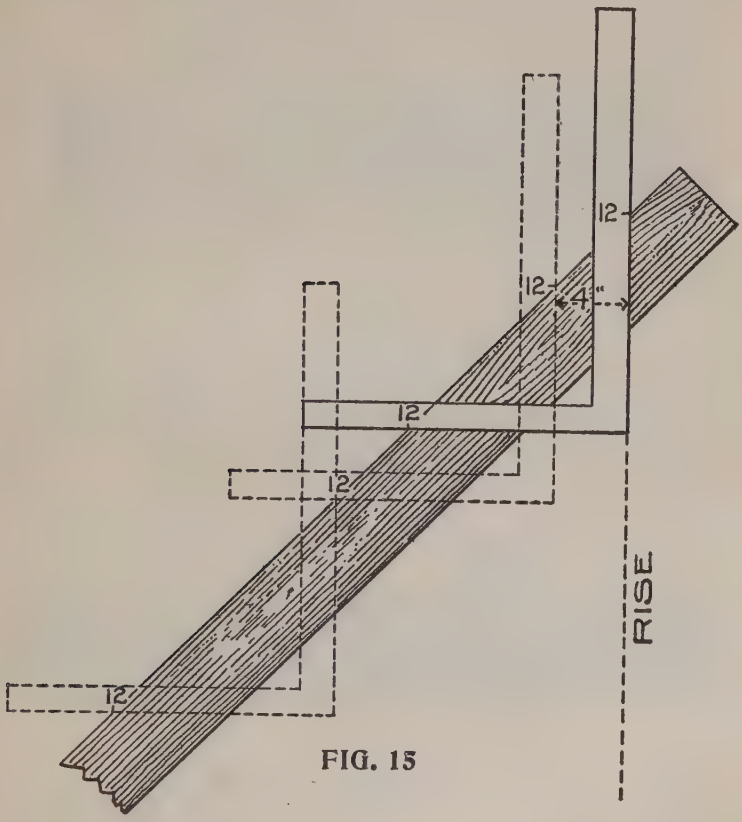

FIG. 15

is the bevel at the point of the rafter. In Fig. 14, is shown an application of this method, or the

correct result may be obtained by measuring at right-angles from the last application of the square as shown in Fig. 15. All other pitches and fractions can be treated in this manner without overtaxing the ingenuity of the workman.

How to Get the Bevels.—Fig. 16 shows how

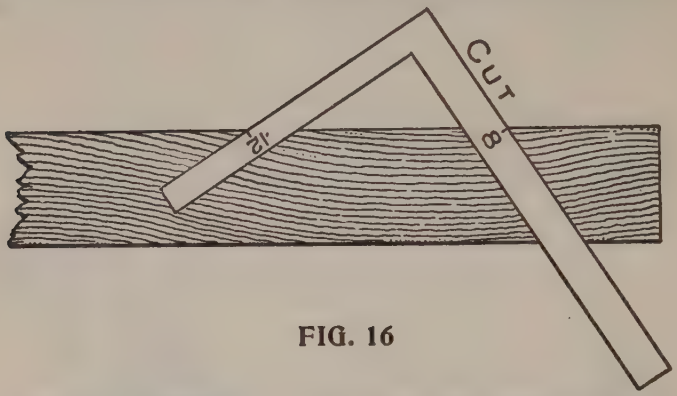

FIG. 16

to get the bevels on the top end of vertical boarding, at the gable ends, suitable for the third pitch at Fig. 11.

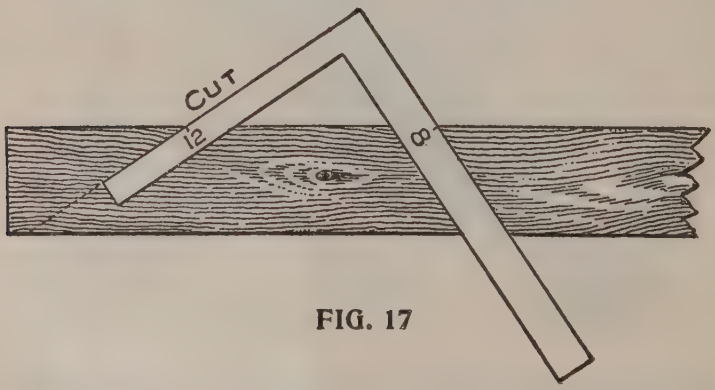

FIG. 17

In Fig. 17 is shown a method for finding the

bevel for horizontal boarding, collar ties, etc. Both of the above are for the one-third pitch.

Roof Pitches Explained.—Inasmuch as roof pitches are not as well understood as they should

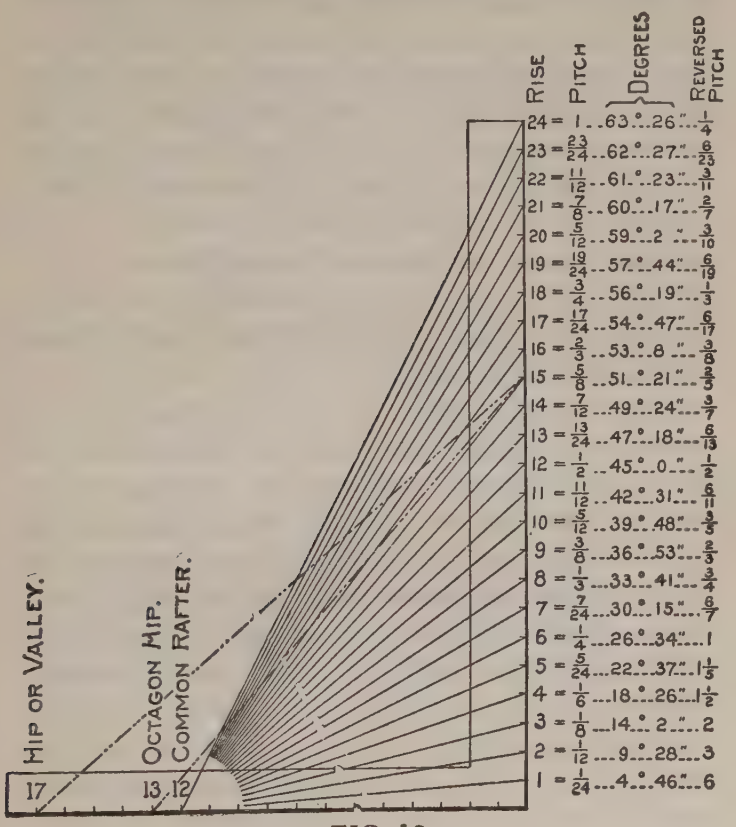

FIG. 18

be, we will go into this matter in some detail, using such diagram and illustrative text as is necessary to make this important subject clear and to help the student to more fully grasp the subject. In discussing "pitch" let

us understand the word "pitch" has reference to the rise given the common rafter in proportion to the span. Therefore by letting 12 on the tongue represent the run of the common rafter the figures on the blade will then represent the rise in proportion to its length (the blade), as 6 being one-fourth of 24 represents the quarter-pitch, 8 represents the one-third pitch, 12 the one-half pitch, etc. See illustration. Fig. 18. For full illustration of roof pitches see Fig. 49A.

For the corresponding hip or valley for the octagon or square cornered building substitute 13 and 17 on the tongue, respectively. However, neither is absolutely correct, but near enough for practical purposes.

The lengths taken diagonally from 12, 13, and 17 on tongue to the figures designating the rise on the blade represent the lengths of the above rafters for a one-foot run. The diagonal lines in the illustration from those figures to 15 on the blade represent five-eighths pitch. Only three of the lengths out of seventy-two are without fractions and they are for the common rafters, as follows: 12 to 5=13 inches, 12 to 9=15 inches and 12 to 16=20 inches. It is on the latter that the rule 6, 8, and 10, so generally used for squaring frame work, is founded. Of course, any of the other angles could be used for this purpose, but the above being without fractions are easy numbers to remember.

The length of the common rafter doubles its run or has a length equal its span when it

has a rise of 60 degrees, which taken on the square is 20.784 inches rise to the foot. The same is true of the octagon hip when it has a rise of a fraction less than 23 inches, and that for the common hip at nearly 29½ inches rise to the foot.

Reversed Pitches.—In the illustration the reversed pitches are also given, that is by letting the blade represent the run and the tongue the rise. The length of the diagonal lines in that case becomes the length of the rafter for a one-foot rise to the inches in run taken on the blade.

The reader will notice that several of these pitches are transposed and are found in the first column, as follows: The 1 pitch is the same as the ¼ pitch when reversed. The ¾ same as ⅓; the ⅔ same as ⅜; the ½ remains the same or unchanged. The low pitches in the first column become very steep when reversed; thus, the $\frac{1}{12}$ pitch becomes 6 pitches or a rise of 12 feet to a one-foot run. The $\frac{1}{12}$ pitch is equal to a rise of 6 feet to a 1-foot run, etc.

For the corresponding lengths of the hip or valley for the reversed pitches add one-twelfth and five-twelfths to the run of the common rafter for the octagon and right-angled corner respectively. In our illustration we also give the degree of pitch for common rafter. To find the same for reversed pitches, it is only necessary to subtract the degrees here given from 90 degrees.

In the following pages you will find explanations and diagrams for finding the lengths of rafters where the rises in the roof are of different heights.

Irregular, Uneven, or Unequal Pitches, are simply different pitches in the same roof. When they are the same on all sides and the building is square, the hips or valleys run in from the corners at an angle of 45 degrees, regardless of the rise of the roof; but should one side be steeper than the adjoining side, or the gables be of different pitch from the main roof, then the hips or valleys depart from the 45-degree angle.

Fig. 19 shows a roof plan with the one-third

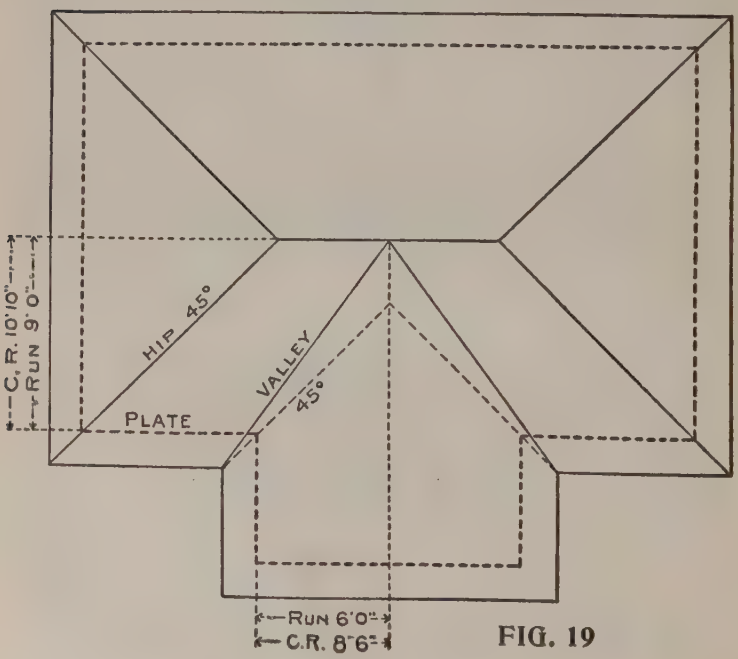

FIG. 19

pitch on the main part, with a half-pitch gable. The seat and down cuts of the jack and common

rafters remain the same as in the even pitch roof, except the top cut of the jack.

We will not take up space to explain this cut at length, but will give that obtained by the

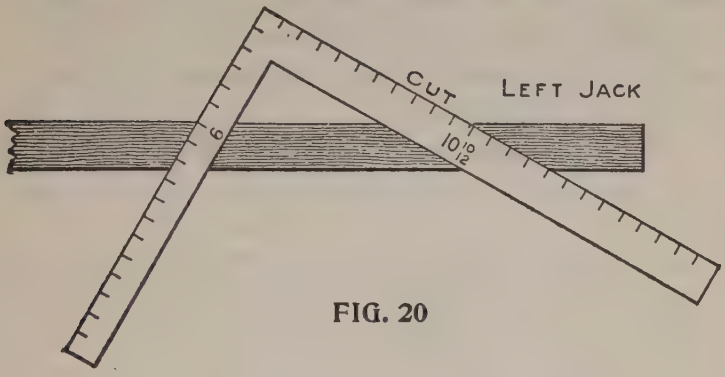

FIG. 20

square as follows: Take to scale the length of the left common rafter on the blade, and the

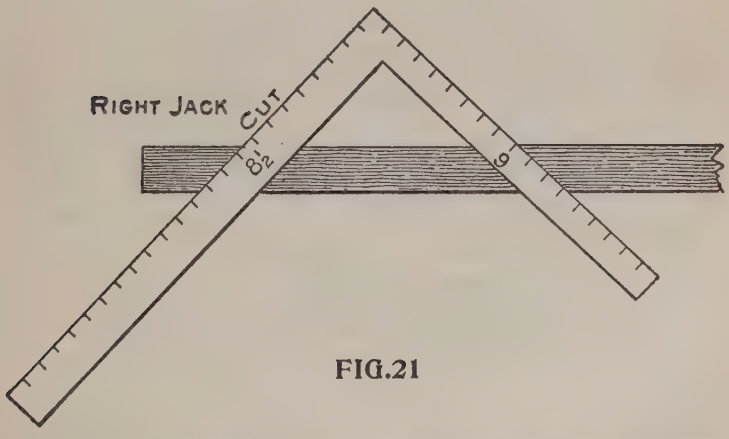

FIG.21

run of the right common rafter on the tongue. Blade gives the cut of the left jack. Vice versa

for the right jack. Figs. 20 and 21 illustrate these cuts.

Projecting Cornice.—Here is another problem that comes in connection with the uneven pitched roof. Where a projecting cornice is desired, with planceer, the valley will not rest on the angle of the plate, but at a point in line with the intersection of the cornice.

This necessitates the plate on the steeper

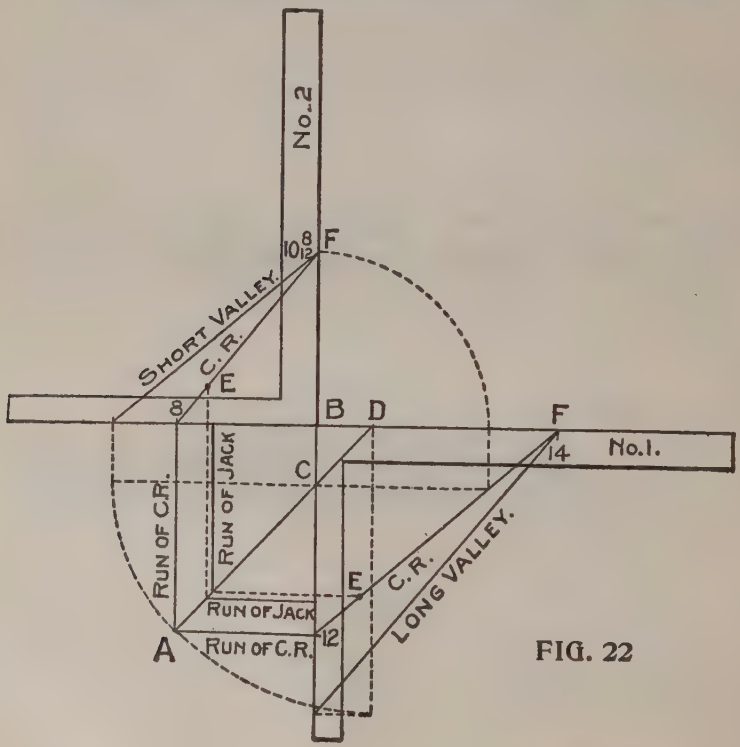

FIG. 22

pitch being raised as much as the difference in the rise of the pitches; in the width of the cornice.

Thus, if the cornice be 18 inches wide, the rise of the half pitch is 18 inches, and that of the one-third pitch is 12 inches, a difference of six inches. Therefore the proper height of the plate above that of the lower pitch is six inches.

To Find the Length of Rafters Where the Rises in the Roof are of Different Height; for example, we will suppose the main gable, Fig. 22, to be 24 feet wide with a 14-foot rise, and the side gable to be 16 feet wide with a 10-foot 8-inch rise. In a case of this kind it is better to let one of the valleys extend on up to the ridge board of the main gable and let the other valley rest against it (the long valley). But how to locate them on the square is the main question. 1st. Place the squares as shown. On square No. 1 lay off the run and rise of the wide gables, and the same for the narrow gable on square No. 2.

2d. By connecting the run and the rise, as shown by the diagonal line on each of the squares will be the length of the common rafter.

3d. Square out from the tongue as shown, till they intersect at A, which will be the runs of the gables or of the common rafters.

4th. Set compasses at B, and open to equal the rise of the narrow gable and swing to the blade of No. 1, and square in to the common rafter, thence run an imaginary line parallel to the blade, and where it intersects the tongue establishes the point where the ridge of the narrow gable or dies intersects on main roof and which point we will call C.

5th. A line drawn from A to C represents the run of the short valley and by extending the line on to the blade of No. 1 establishes point D, from which to B, represents the run of the long valley, and these lengths taken on the tongues as shown, and connected with their respective rises, will be their lengths.

6th. The lengths of the jacks are found as shown from E to F, which we trust is clear enough without further explanation.

The cuts and bevels are all contained in this diagram.

The Pitch of the Tower Roof may be obtained along with all the bevel lines by the proper use of the steel square, as shown in Fig. 23, which illustrates some unusual pitches. It is evident that if the run of 1 foot is 12 inches, the span must be double that or 24 inches; therefore the rise must be that proportion of the

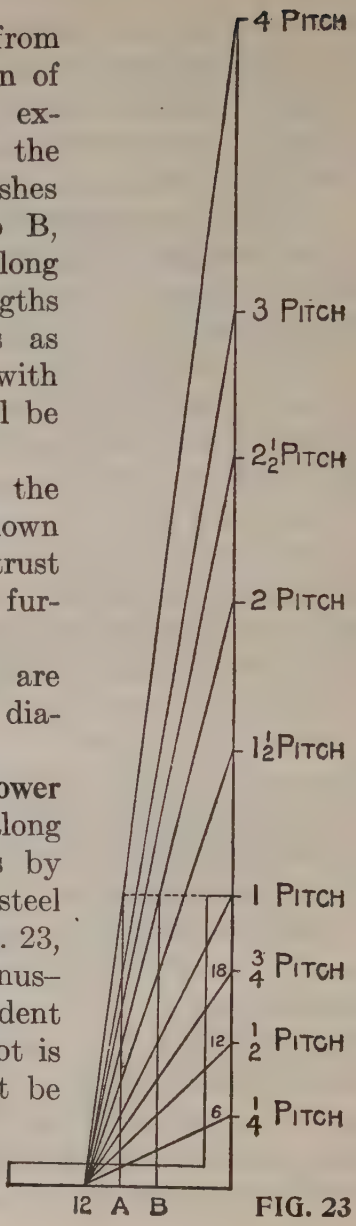

FIG. 23

span. Then the first inch in rise is one-twenty-fourth, the second one-twelfth, the third one-eighth, etc. The twenty-fourth inch rise being equal the span, it is therefore one pitch. As the rise continues above this point, it is simply a repetition of the above with a 1 prefixed, thus: The twenty-fifth inch rise being one and one-twenty-fourth pitch, etc.; but we are now beyond the limits of the full scale as applied to the square, so we must reduce the scale. By letting the vertical line B represent the blade we will have reduced the scale one-half. The pitches would center at 6 on the tongue instead of 12, as in the full scale. We must now use the half inches above 12 on the blade for each rise of one inch till we reach the twenty-fourth inch, which will be equal to two pitches or 48-inch rise to the foot. For steeper pitches it is necessary to again change the scale. If we let the blade rest at A the pitches will center at 3 on the tongue (making the scale $\frac{1}{4}$ size), and by letting the $\frac{1}{4}$ inches above 12 on the blade represent the full inches in rise will give the cuts, etc., from the forty-eighth inch rise to the ninety-sixth inch rise to the foot, or 4 pitches.

Hip Rafters.—Fig. 24, represents the plan of a roof as furnished by an architect. Fig. 25 shows the square set to the pitch of the common rafter, while Fig. 26 shows the same for the hip rafter. The squares as set give plumb and level cuts. Fig. 24 is the rafter plan of the house 18 by 24 feet; the rafters are laid off on the level, and

measure nine feet from center of ridge to outside of wall; there should be a rafter pattern with a plumb cut at one end, and a foot cut at the other,

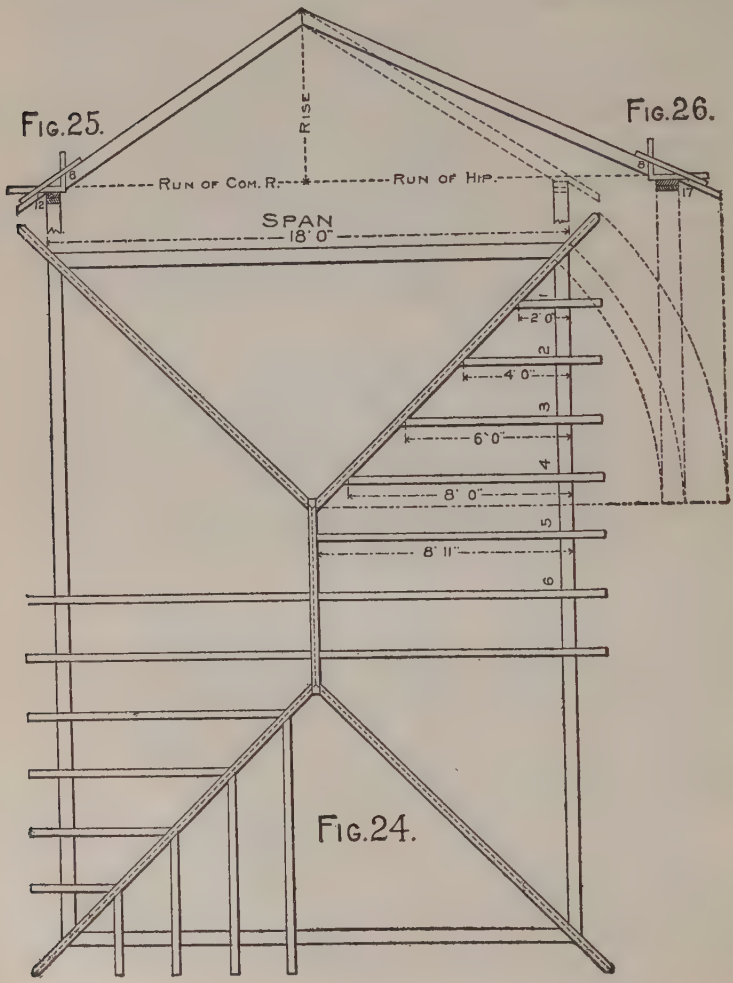

gotten out as previously shown. (Fig. 25, 26). When the rafter foot is marked, place 12 on the

long blade of the square to the wall line, as in Fig. 25, and mark across the rafter at the outside of the short blade, and slide the square up the rafter and place the 12 of the long blade to the mark last made and mark outside the short blade as before, repeat the application until nine feet are measured off, and then the length of the rafter is correct; remember to mark off one-half the thickness of ridge-piece, which is done by measuring at right-angles back from the plumb cut. The rafters are laid off on part of plan to show the appearance of the rafters in a roof of this kind, but for working purposes the rafters 1, 2, 3, 4, 5, and 6, with one hip rafter, are all that are required.

Length of Hip Rafters—How to Get the Inches and Fractions.—Fig. 26A shows how to get the length of a hip rafter for a half pitch roof for a building 17 feet 7 inches wide, making 8 feet 9½ inches in the run. For the 8 feet in the run 17 and 12 are taken eight times on the square. The reason 17 is used is because it is the practical length of the diagonal of a one-foot square, and 12 is used because it represents the half pitch to a one-foot run, as shown in Fig. 26A. Therefore these figures taken on the steel square eight times will give the length for the eight feet in the run, and for the nine and one-half inches proceed in the same way taking the diagonal of nine and one-half inches, which is thirteen and one-half, and a line drawn from 13½ parallel with the one from 17 to 12, and the point of intersection on the blade

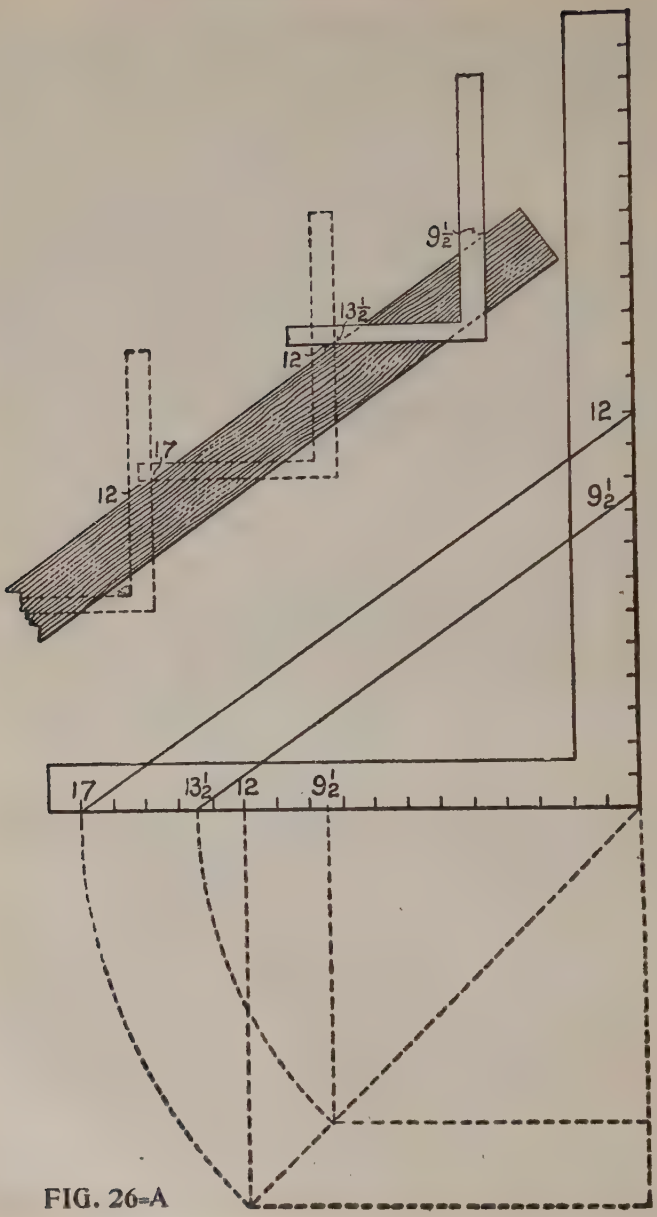

FIG. 26-A

will be the figures to use for the last application of the steel square to obtain the length for the extra nine and one-half inches in the run. In the case of the half pitch, the rise being equal to the run, the figures on the blade are the same as those in the run. This should not be allowed to confuse, as it does not occur in any other pitch.

Valley Rafter for Gable.—To get the length of a valley rafter for a gable of half pitch to fit over another of three-eighths pitch, first lay off the pitches 12 to 12 and 12 to 9, as shown in Fig. 26B. Now assuming that the run for the half pitch is six feet six inches and that for the three-eighths pitch is fourteen feet, we lay off these lengths on the run as shown at A B and A B′. Square up from B and B′ to the respective pitches intersecting at C and C′. Then A C will be the length per one inch scale for the common rafter for the half pitch, and A C′ will be the same for the three-eighths pitch. Now for the length of the valley, square over from C′ to D and drop to E on the run, and this transferred to A E′ represents the end, and A B′ the side of a plan whose diagonal A F will represent the run for the long valley to catch the ridge of the main gable, and this transferred to F′ and erect the rise F′ G, and draw the line A G which will be the length of the long valley, and by squaring over from B C intersecting A G at J. Thus A J will be the length for the short valley and its run will be A J. The point at H is at the intersection of the ridge of the half pitch with the main roof. J G represents

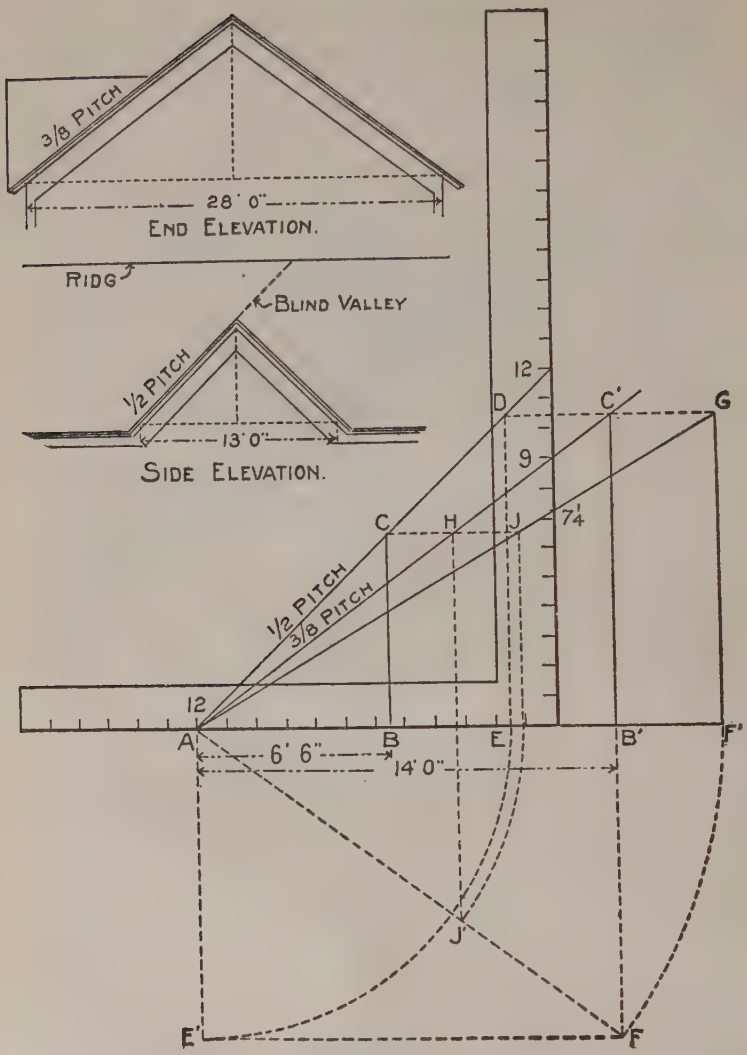

FIG 26 B

that part of the long valley commonly called blind valley. Where the roofs of different pitches

are of the same height it is quite an easy matter to arrive at the length of the valley, as their runs

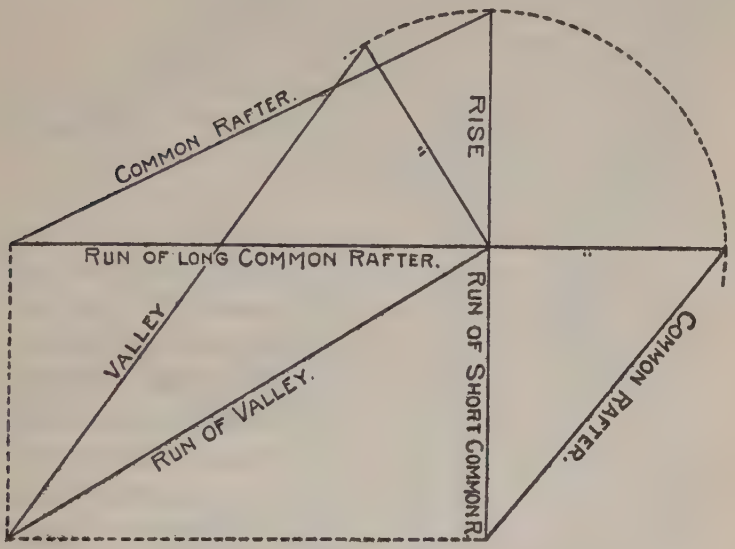

FIG. 26 C

form the sides of the plan as shown in Fig. 26C, which needs no further explanation.

Curved Hip Rafters.—Fig. 27 shows how a curved hip-rafter may be obtained. The rafter shown in this instance is ogee in shape, but it makes no difference what shape the common rafter may be, the proper shape and length of hip may be obtained by this method. It will be noticed that one side of the example shown is wider than the other; this is to show that the rule will work correctly where the sides are unequal in width, as well as where they are equal.

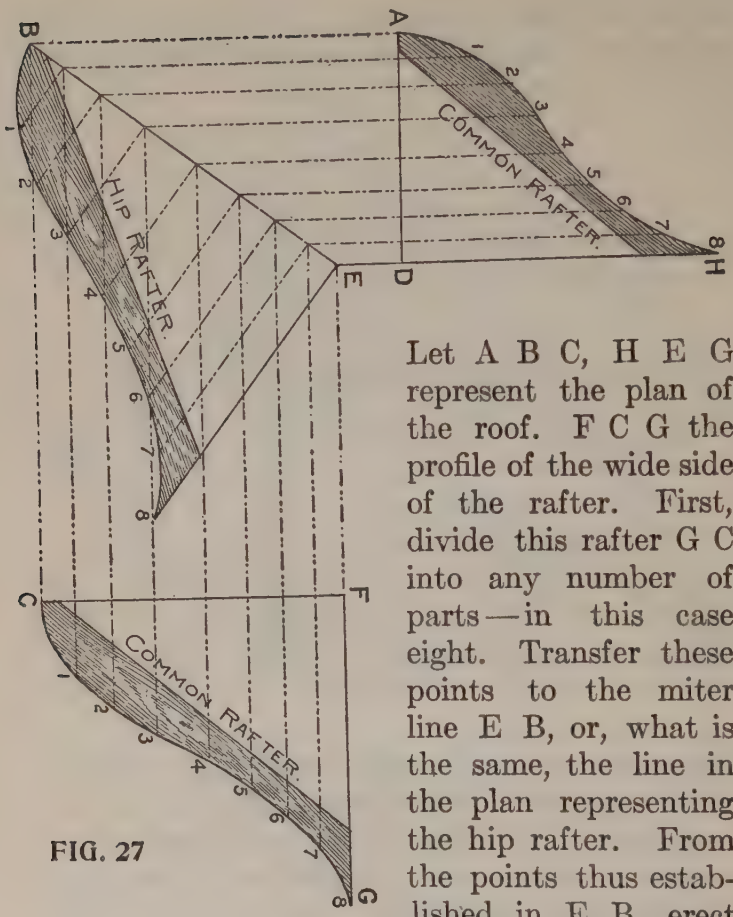

FIG. 27

Let A B C, H E G represent the plan of the roof. F C G the profile of the wide side of the rafter. First, divide this rafter G C into any number of parts—in this case eight. Transfer these points to the miter line E B, or, what is the same, the line in the plan representing the hip rafter. From the points thus established in E B, erect perpendiculars indefinitely. With the dividers take the distance from the points in the line F C, measuring to the points in the profile G C, and set the same off on corresponding lines, measuring from E B, thus establishing the points 1, 2, 3, etc.; then a line traced through these points will be the required hip rafter.

Common Rafters.—For the common rafter on the narrow side, continue the lines from E B parallel with the lines of the plan H E and A B. Draw A D at right angles to these lines. With the dividers as before, measuring from F C to the points in G C, set off corresponding distances from A D, thus establishing the points shown between A and H. A line traced through the points thus obtained will be the line of the rafter on the narrow side. This is supposed to be the return roof of a veranda, but is only shown as an example, for it is not customary to build verandas nowadays with an ogee roof, but with a rafter having a depression or cove in it. For accuracy it would be as well to make nearly twice the number of divisions shown from 1 to 8, as are there represented.

In speaking further of roof-framing and particularly of framing of hip and valley roofs, bear in mind that much has been said and can be said on the subject, but it is the aim to say as little and do as much as possible to make the subject clear. Every carpenter knows that the run and rise of the rafter taken on the square will give the seat and plumb cuts, but inasmuch as buildings are not all of the same width, it requires a different set of figures for each run, and as it requires an extra calculation to find the run of the hip or valley, it is better to use the full scale for a one-foot run of the common rafter, which answers for any run.

To Find the Length and Cut of Rafters.—Referring to Fig. 28, we show a square bounded by

A, B, C, D, the sides of which are 12 inches. E is at a point 5 inches from B, and C 12 inches

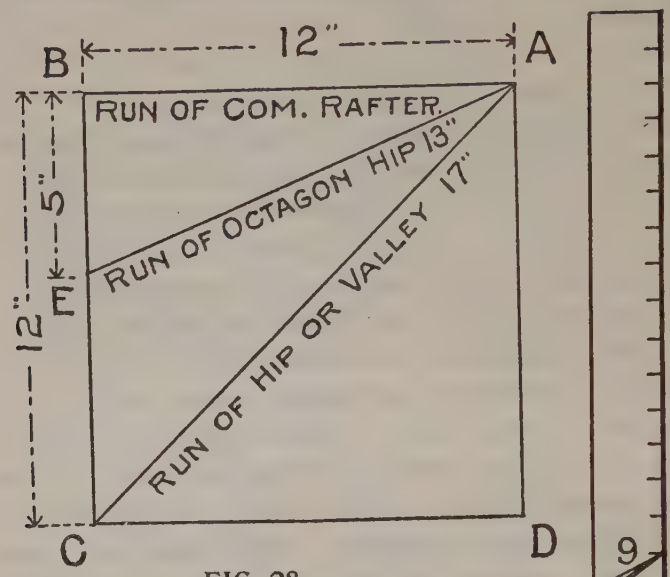

FIG. 28

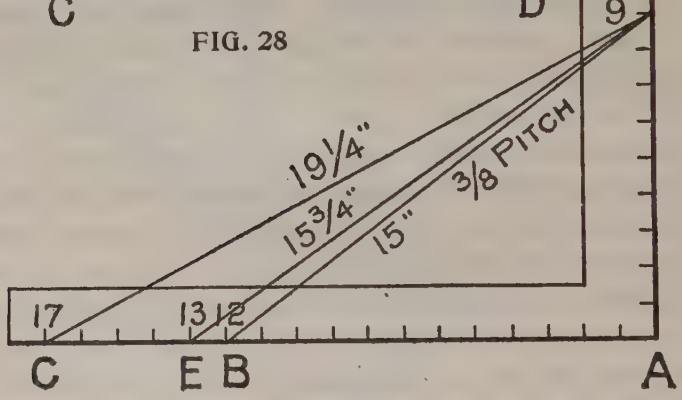

FIG. 29

from B. B-A represents the run of the common rafter. E-A represents the run of the octagon hip or valley, and C-A the same for the common

hip or valley, their lengths being 12, 13, and 17 respectively. Now since 12, 13, and 17 are fixed

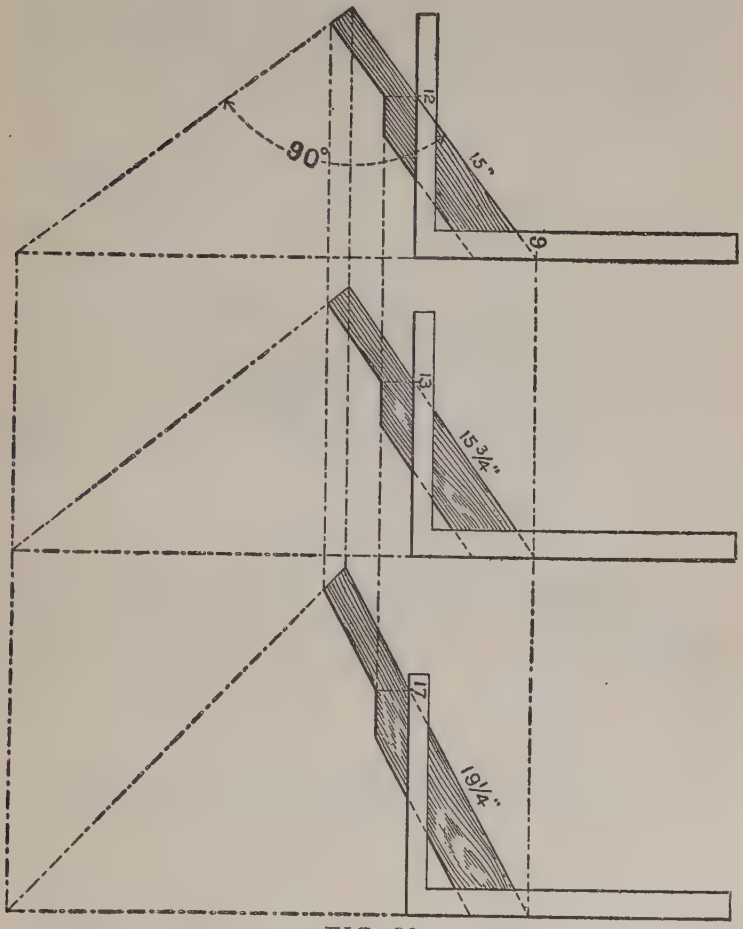

FIG. 30

numbers, we take them on the tongue of the square, as shown in Fig. 29. Now suppose we want to find the lengths and cuts of the rafters

for the $\frac{3}{8}$ pitch. We take 9 on the blade. Why? Because the run being 12 inches, the span must be two times 12, which equals 24, and since the pitch is reckoned by the span, we find that $\frac{3}{8}$ of 24 is 9, which represents the rise to the foot run.

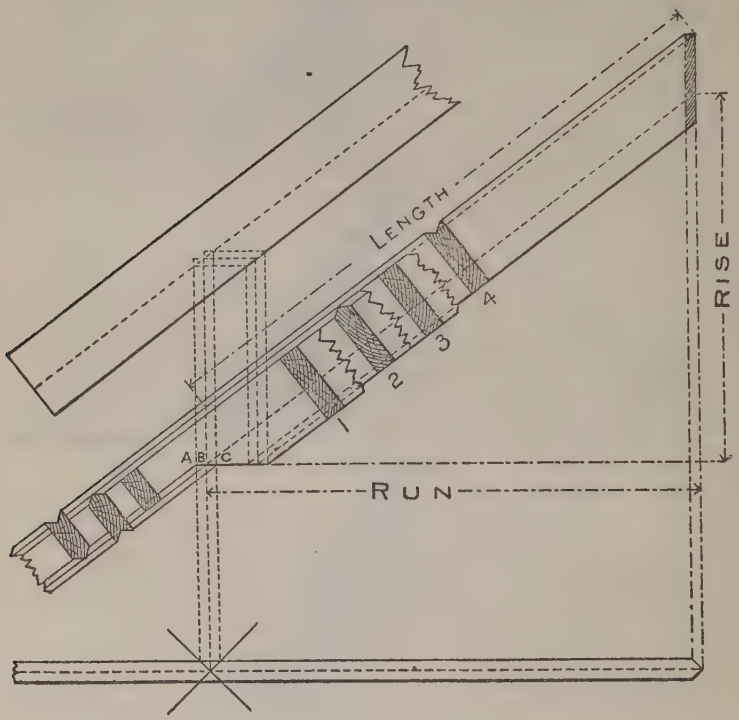

FIG. 31

Then 12 and 9 give the seat and plumb cuts for the common rafter, 13 and 9 for the octagon hip or valley, and 17 and 9 give the same for the common hip or valley. In Fig. 30 we show each separately.

The Measurement Line of Hips and Valleys is a line along the center of its back, and just where to place the square on the side of the rafter so as to make the cuts and length come right at that point is a question that taxes the skill of most carpenters, especially so when the rafters are so backed. In Fig. 31, we have tried to make the above points clear.

First, we show the plan of the rafter. The cross lines on same represent an external corner for the hip and valley respectively. Above the plan is shown the elevation. The sections 1, 2, 3, 4, represent the position of the rafters under the following conditions: No. 1 hip when not backed, No. 2 hip when backed, No. 3 valley when not backed, No. 4 valley when backed. By tracing the bottom line of each section down to the line C-A which is parallel to the seat cut and is regulated by the height given the upper edge of the common rafter above the corner of the plate as at A-B, will show how deep the notching should be for each rafter. No. 1 cuts into the right hand vertical line from the plan, which would make it stand at the right height above the plate, but in order to make the seat cut clear the corner of plate, it is necessary to cut into the center line above the plan. No. 2 cuts into the same points as No. 1, but owing to its being backed, the seat cut drops accordingly. No. 3 cuts into the center vertical line, and in order to clear the edges of the plate must cut out at the sides to the left vertical line. No. 4 cuts in the same as

the latter, but as much lower than No. 3 as No. 2 is below No. 1.

The outer vertical lines from the plan represent the width of the rafter. Therefore if the rafter be two inches thick, would be one inch apart, and this amount set off along the seat line (or a line parallel with it) will give the gauge point on the side of the rafter. To make this clearer refer to Fig. 30; 17 and 9 gives the cuts. Now leaving the square rest as it is, measure back from 17 one-half the thickness of the rafter, and this will be the gauge line point from which to remove the wood back to the center line of hip, and the measurement from the edge of the rafter taken vertically down to the gauge point set off on the plumb cut regulates how far apart the parallel lines of the seat cuts will be under the above conditions. This rule applies to any roof so long as the pitches are regular.

Proceed in like manner for the octagon hip, the variation, however, is five-twelfths or practically one-half of the above results for the square cornered building.

In Fig. 32 is shown the plan of a hip and common rafter in place, also an elevation of same with the hip swung parallel to the common rafter, A C and A B being their respective lengths. This figure also illustrates the relative pitch of one to the other but when set in their respective places on the building are of the same plane.

Fig. 33 illustrates side cut of the jack, 12 on

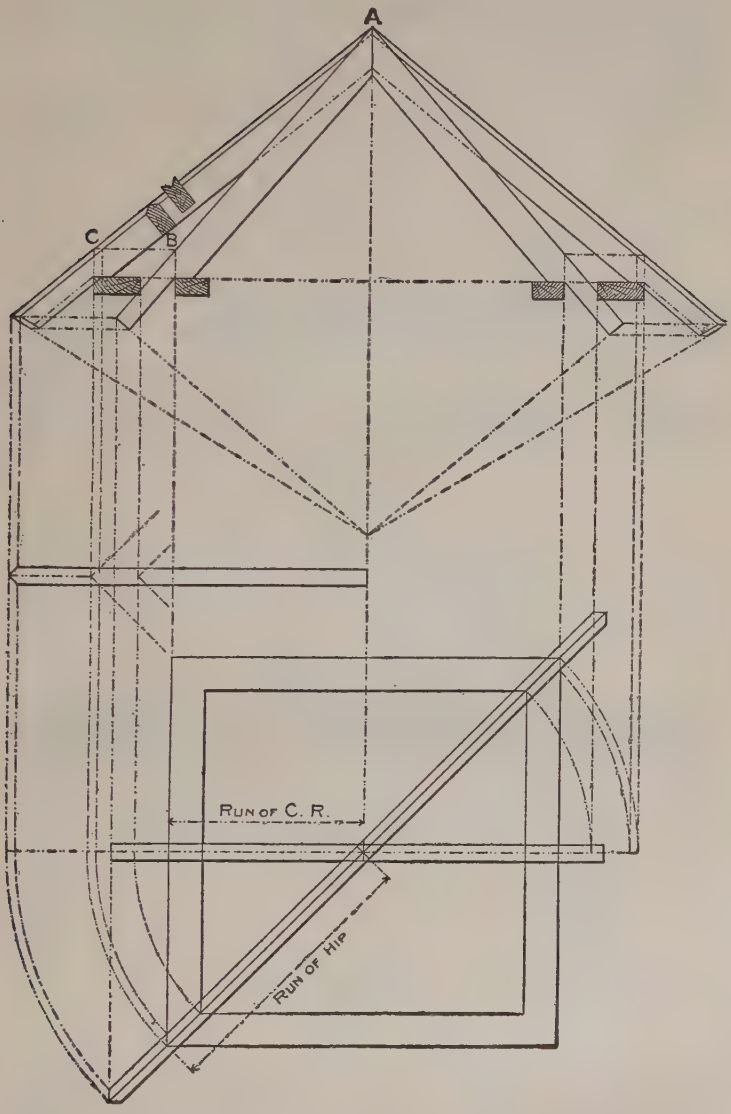

FIG. 32

the tongue, and 15 (length of the common rafter) on the blade.

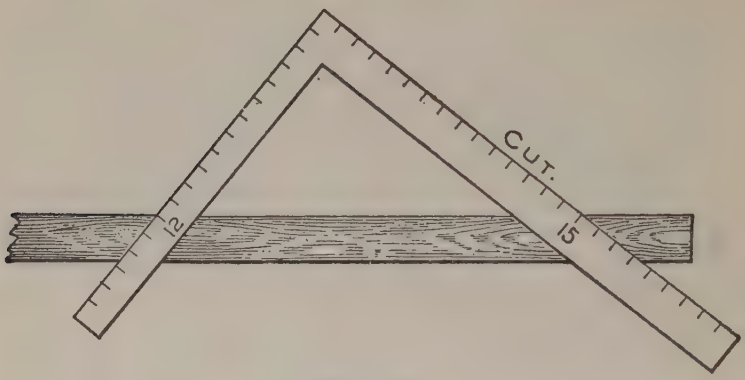

FIG. 33

Fig. 34 illustrates side cut of the octagon jack, 5 on the tongue and 15 on the blade.

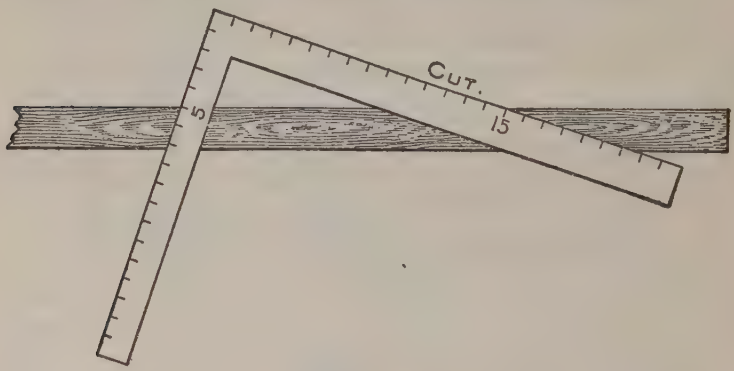

FIG. 34

Fig. 35 illustrates the side cut of the hip or valley, 17 on tongue, 19¼ (length of the hip) on the blade. The blade giving the cut in each case.

The latter, however, is for the unbacked rafter. If it has been previously backed, then apply the square with the above figures on the lower edge at bottom of the plumb cut, or apply the

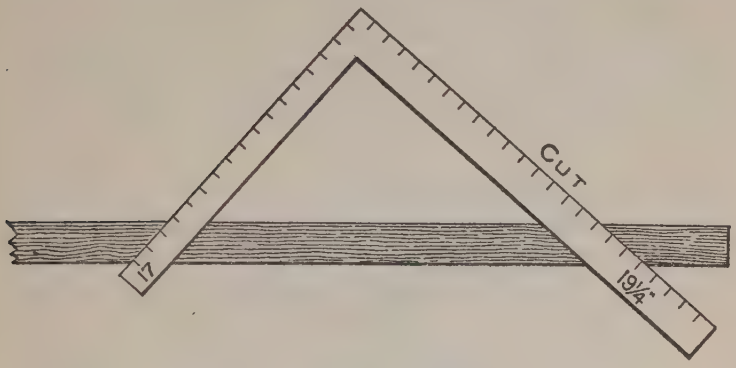

FIG. 35

square as for the jack, Fig. 33, to the backing line, which will give the same result as 17 and 19¼.

It is quite clear that when a workman cuts a common rafter he is also cutting a timber that would answer for a hip for a building of less span having the same rise, only taking some adjustment of the top bevel to fit against the ridge. This is quite plain, and if we refer to Fig. 36 we find that the common rafter for a 1-foot run becomes a hip for an 8½ inch run, and that a hip for a 1-foot run of the building becomes a common rafter for a 17-inch run. Therefore, the rule that applies to the common rafter also applies to the hip rafter, i. e., the run and rise taken on the square will give the seat and plumb cuts. The run and length of the rafter taken

on the square will give the side cuts, or taking the scale for a 1-foot run, Fig. 36, it is 12 on the tongue and the rise on the blade for the common rafter, and 17 on the tongue and rise on the blade

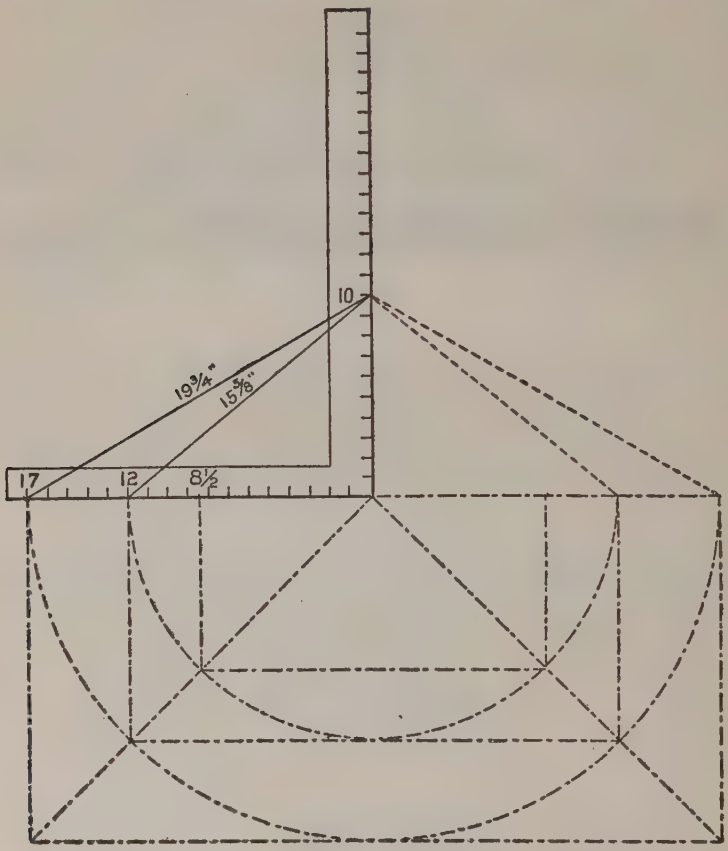

FIG. 36

for the hip. The tongue giving the seat cut and the blade the plumb cut. For the side cuts we take 12 on the tongue and 15 and five-eighths

inches on the blade, and the blade will give the side cut of the jack. Take 17 on the tongue and the length of the hip, $19\frac{3}{4}$ inches on the blade, and the blade will give the side cut of the hip. It would also be the side cut of the corresponding jack if it be a common rafter. Seventeen is used for a foot run of the hip rafter because the diagonal of a 12-inch square is practically 17 inches.

If we were to use 12 on the tongue for a foot run of the hip the rise to the foot would necessarily be less than 10 inches. In Fig. 37 we show what the difference is in the rise to the foot.

From 12 to 12 is the length of the run of the hip, and this, taken on a continued line of the run of the common rafter, and an equal rise of the common rafter, set off as at A, and a line from this to 12 on the tongue passes at 7 and one-

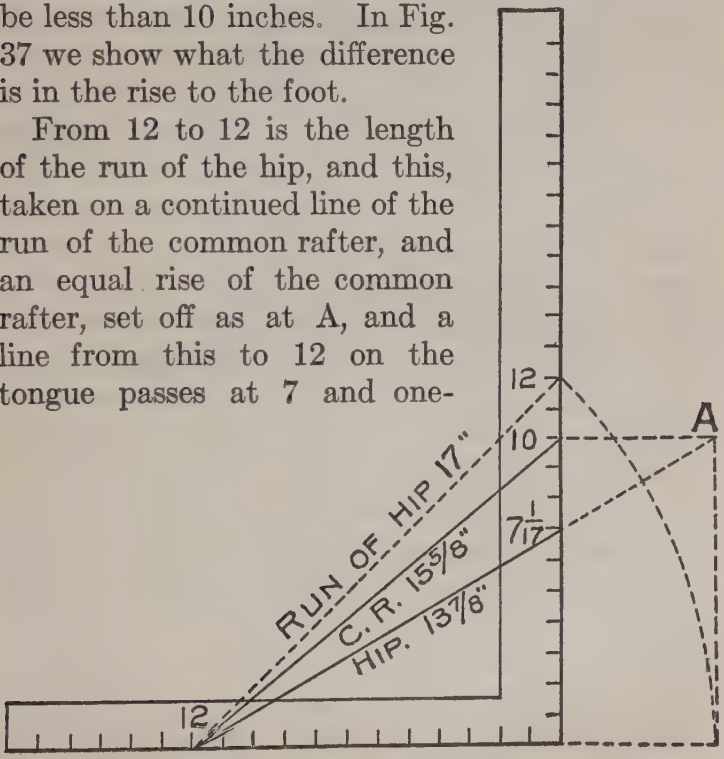

FIG. 37

seventeenth inches on the blade, because the common rafter having a rise of 10 inches to one foot, for one inch it would have ten-twelfths of an inch, while the hip would only have ten-seventeenths of an inch to one inch and for 12 inches it would be 12 times ten-seventeenths, equals 120 seventeenths, or 7 and one-seventeenth inches. Therefore the figures given in the second part of illustration would give the same cuts as those in the first, but the latter necessitates a calculation that ends in fractions—fractions not given on the square—and for that reason 17 is generally used for a foot run for the hips and valleys.

An Unequal Pitch.—In the matter of roofing over unequal pitches when there is no ridge and when all hips meet, the building being longer than it is wide, the backing of hips and their lengths and bevels would be a very easy matter if a drawing of the whole thing were made, but, to obtain these by the use of the square alone, is somewhat more difficult. Let us assume the building to be 18 feet wide and 28 feet long, and having a rise of 9 feet, then, by referring to Fig. 38, we show to one-inch scale the length, run, rise, seat, and plumb cuts for the hip and common rafters as follows: The run of the long way of the building is 14, and 9 for the narrow way, which we take on the blade and tongue respectively, as shown on square No. 1, and to this apply square No. 2, as shown. A D equals the run of the hip. A E equals the rise and E D

equals the length of the hip. The reader will notice that the letters A, B, C, D, form a parallelogram, with side and ends equal to the runs

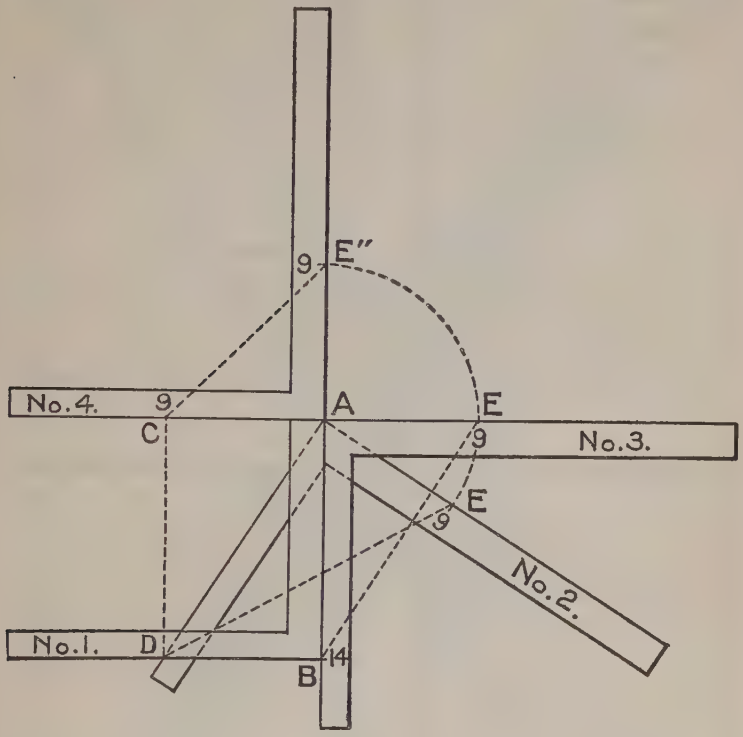

FIG. 38

of the common rafters. Therefore, by taking the runs on the tongue, as shown by the squares Nos. 3 and 4, will give their lengths, seat and plumb cuts.

In Fig. 39 is shown the intersection of the rafters at the peak and as the lengths of all rafters are scaled to run to a common center it is neces-

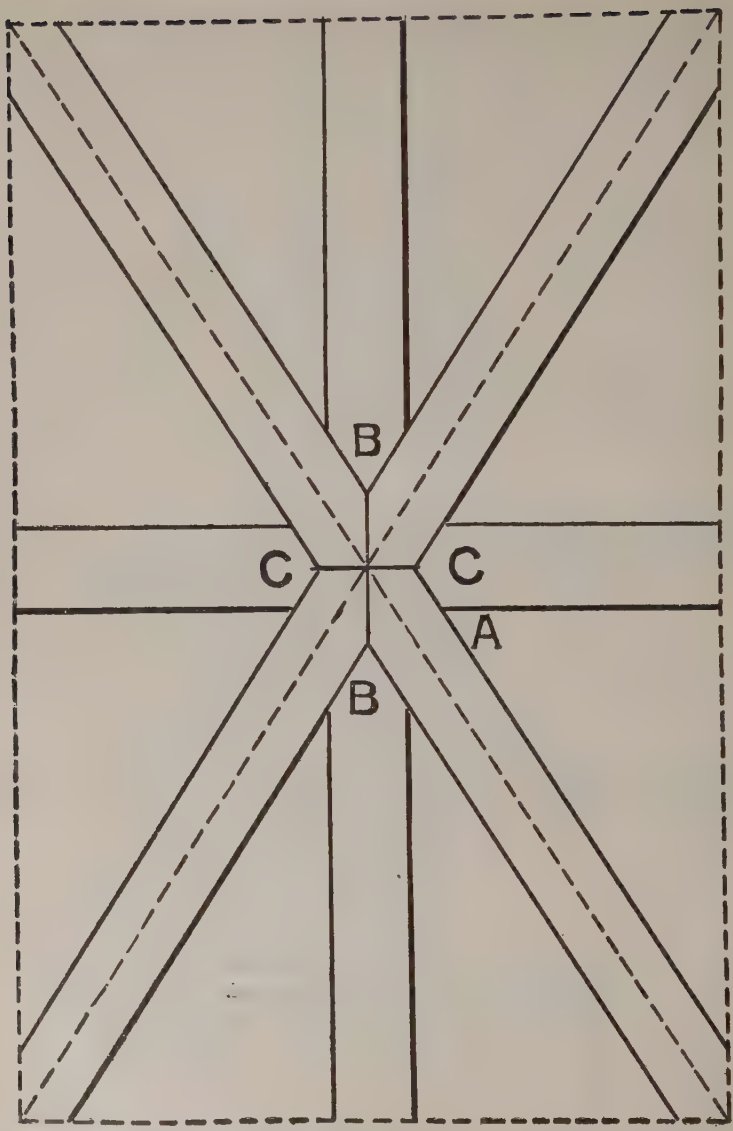

FIG. 39

sary that the common rafters must cut back so as to fit in the angle formed by the hips. The proper deduction for this is shown in Fig. 40 by

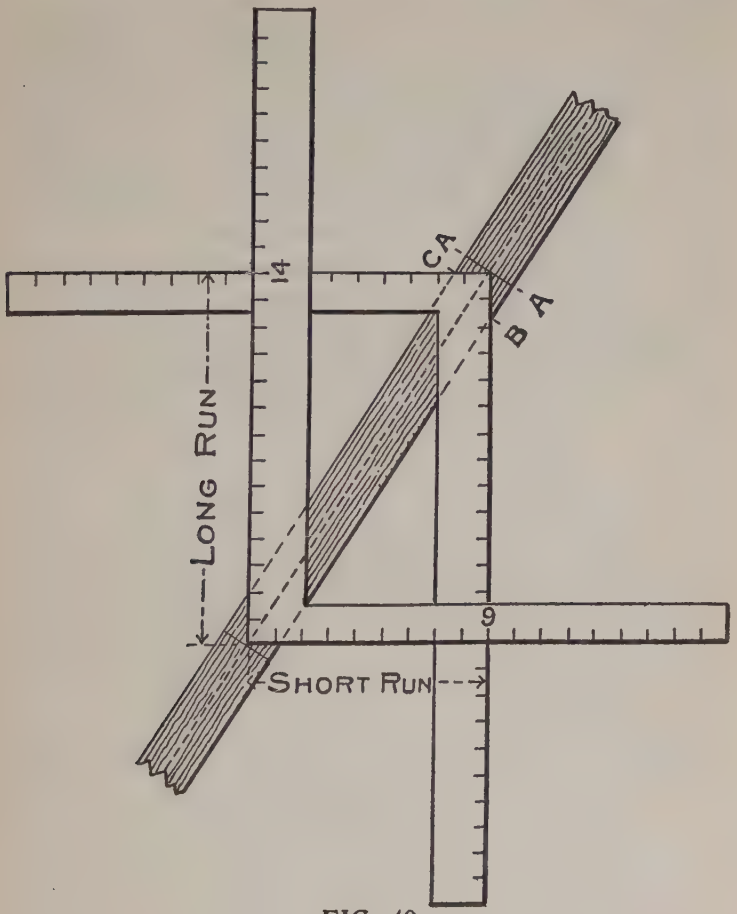

FIG. 40

placing two squares on the back of the rafter, with the heel or corner of the squares resting on the center line. The distance from the corner

of the square to B measured square back (at right angles) from the plumb bevel, as shown in Fig. 38, will locate the point of the long common rafter at B in Fig. 39. Proceed in like manner for the short common rafter, taking the distance from the corner to C, and for the side cuts, take 14 on the tongue and the length of the short common rafter C E on the blade—the blade will give the cut at A C in Fig. 39. The reader will observe that this angle is the same as that for the side of the jack. Proceed in like manner for the long common rafter side, using 9 on the tongue and B E on the blade. These same figures will give the side cuts of the hip, provided hip has been previously backed. Taking the last for example, the reader will observe that 9 on the tongue and B E on the blade, the square would lay on the plane of the backing and the blade giving the cut along the line BB in Fig. 39, or these cuts may be found by measuring square back from a plumb bevel at points A and A, Fig. 40, the distance A C and A B, which will give the proper plumb cut at the sides and intersecting the line A A at the center. These same distances, A C and A B, but transferred to opposite sides, set off on the seat cut or a parallel with it, will give the gauge points on the side of the hip for the backing.

To Find the Length of the Jacks.—The lengths of the jacks may be found by dividing the length of the common rafter by the number of the spacings for the jacks; the quotient will be the common difference.

Part V

HIP ROOF FRAMING

A Formula in Figures—Side Cut of the Hip—Beveling of Hip Rafter—To Cut Bed Moulds—The Principles to be Determined in a Hip Roof—To Find the Backing of a Hip Rafter—How to Find the Shoulder of Purlins—How to Pierce a Circular Roof With a Saddle Roof—Illustration of Roof Pitches—Reckoning by Degrees—Decimal Equivalents—Framing by Degrees—How to Find the Length of the Rafters to a Given Scale, Also the Bevels That Give the Cuts—Octagonal Roofs—Lengths and Bevels of Hips and Jacks—To Obtain Length of Various Rafters for Any Width of Building—Different Kinds of Jacks Described—Hexagonal Roofs—To Timber Hexagonal Roofs

A Formula in Figures.—We first lay off common rafter, which has been previously explained; but deeming it necessary to give a formula in figures to avoid making a plan, we take one-third pitch. This pitch is one-third the width of building, to point of rafter from wall plate or base. For example, always use 8, which is one-third of 24, on tongues for altitude; 12, one-half the width of 24, on blade for base. This cuts common rafter. Next is the hip-rafter. It must be understood that the diagonal of 12 and 12 is 17 in framing, and the hip is the diagonal of a square added to the rise of roof; therefore we take 8 on tongue and 17 on blade; run the same number of times as common rafter, these figures

also give the seat and plumb cut of the hip. To cut jack rafters, divide the number of openings, for common rafter. Suppose we have five jacks, with six openings, our common rafter is 12 feet long, each jack would be two feet shorter. First 10 feet, second 8 feet, third 6 feet, and so on. The plumb cut is the same as for the cut of common rafter; seat cut also the same as for the common rafter. To cut miter to fit hip. Take half the width of building on tongue and length of common rafter on blade; blade gives cut, or the same result may be found by taking the diagonal of 12 and 8, which is 14 7-16, then take 12 on tongue, 14 7-16 on blade; blade gives cut.

Side Cut of the Hip.—In connection with the hip there must be another cut considered, called the side cut of the hip, though the angle

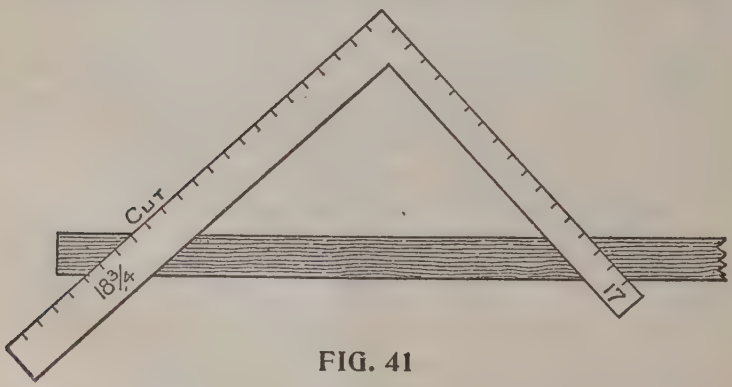

FIG. 41

to obtain this cut is across the top or back of the rafter. Were there no slope to the roof, this angle where it meets the ridge pole would be an

angle of 45 degrees, but when a slope is given this angle becomes more acute. The rule is, take the length of the hip on the blade and its run on the tongue, the blade gives the cut or take 17 on the tongue and $18\frac{3}{4}$ on the blade, blade gives the cut as shown in Fig. 41.

Beveling of Hip Rafter.—The hip-rafter should be beveled so as to be in plane of the common rafter; height of hip on tongue, length of hip on

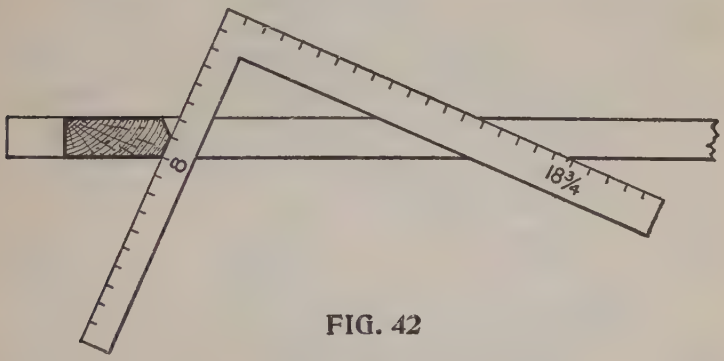

FIG. 42

blade; tongue gives bevel, or we take 8 on tongue, $18\frac{3}{4}$ on blade; tongue gives bevel, as shown in Fig. 42. These figures will cover all cuts in putting on cornice and sheathing.

To Cut Bed Moulds For Gable to fit under cornice; take half the width of the building on tongue, length of common rafter on blade; blade gives cut; machine mouldings will not member, but this gives a solid joint; and to member properly it is necessary to make the mouldings by hand, the diagonal plumb cut differences.

To Cut Planceer, to Run Up Valley: Take

height of the common rafter on tongue, length of rafter on blade; tongue gives the miter cut. The side cut takes the length of common rafter on blade, and run on tongue; tongue gives cut.

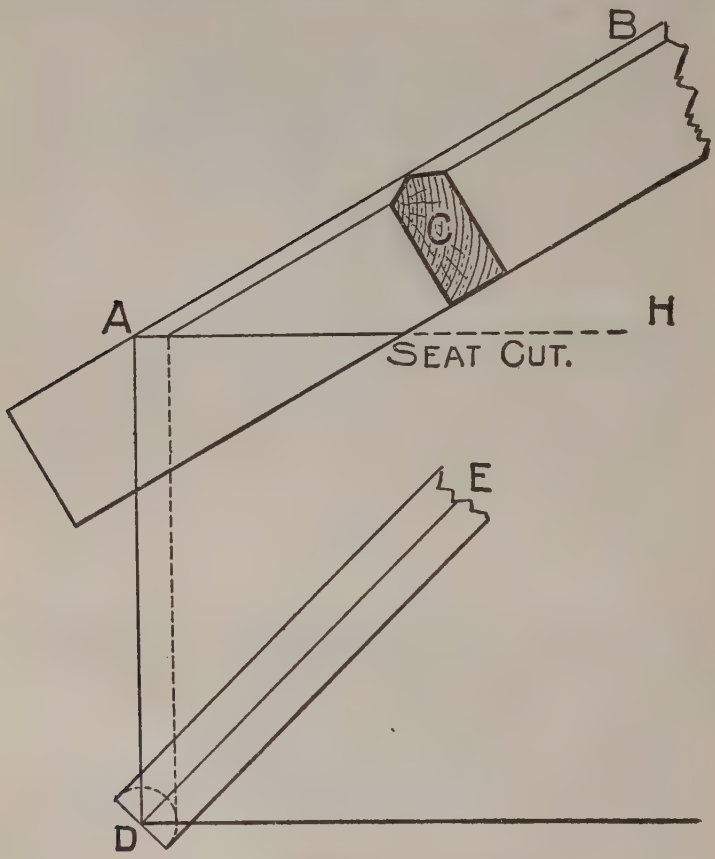

FIG. 43

These figures give the cuts regardless of width of building.

Fig. 43 applies to backing of hips where the

corner is at right angles and the pitches are the same. At the angle D will be seen the intersection of the sides of the angle rafter with the sides of the plan.

With one point of the compasses at D, describe the curve from the line as shown. Tangential to the curve draw the dotted line, cutting AH, then draw a line parallel to A B, the pitch of the hip. The bevel will be found at C, which is a section of the hip-rafter.

The Principles to Be Determined in a Hip Roof are eight, namely:

1st. Span or width of building to be roofed.

2d. Run of the building, which is $\frac{1}{2}$ the span.

3d. The rise given the common rafter.

4th. The angle that the common rafter makes with the level of the plate; that is, the pitch of the roof.

5th. The length of the common rafter.

6th. The angle that the hip-rafter makes with the adjoining sides of the roof.

7th. The length of the hip-rafters.

8th. The distance from the corner of the building to the center line of the first jack, that is, the common difference.

The 1st, 2d and 3d being given, the others may be found, as will be shown by the following illustration.

To Find the Backing of a Hip Rafter when the plan is right-angled, we proceed as shown in Fig. 44. Let Bb, bC be the common rafters, AD the width of the roof, and aB equal to one-

half the width. Bisect B C in a, and join A a, D a. From a set off ac, ad equal to the height of the roof ab, and join Ad, Dc; then Ad, Dc are the length of the hip-rafters. To find the backing:

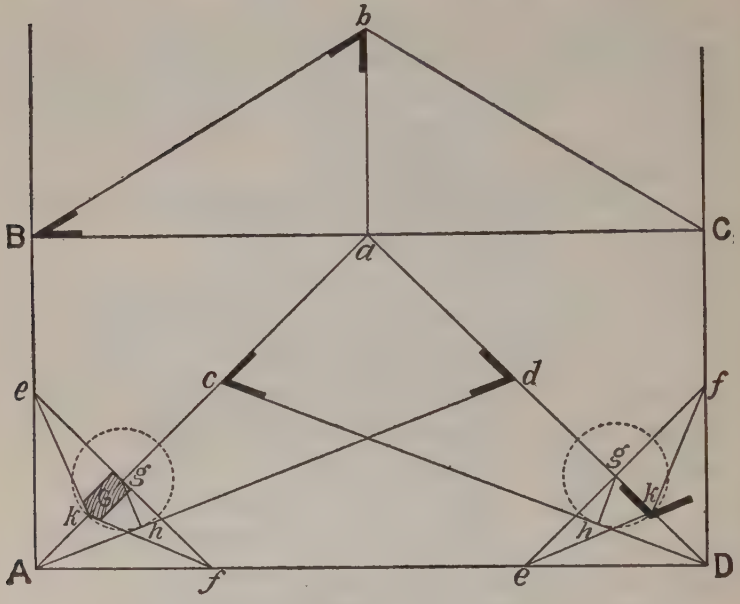

FIG. 44

From any point h in Ad, draw the perpendicular hg, cutting Aa in g; and through g draw perpendicular to Aa the lines ef, cutting AB, AD in e and f. Make gk equal to gh, and join ke, kf; the angle ekf is the angle of the backing of the hip-rafter G.

Fig. 45 shows the method of obtaining the backing of the hip where the plan is not right angled.

Bisect AD in a, and from a describe the semi-circle AbD; draw ab parallel to the sides AB, DC, and join Ab, Db, for the seat of the hip-rafters. From b set off on bA, bD the lengths bd, be, equal to the height of the roof bj, and join Ae, Dd, for the lengths of the hip-rafters. To find the backing of the rafter: In Ae, take any point

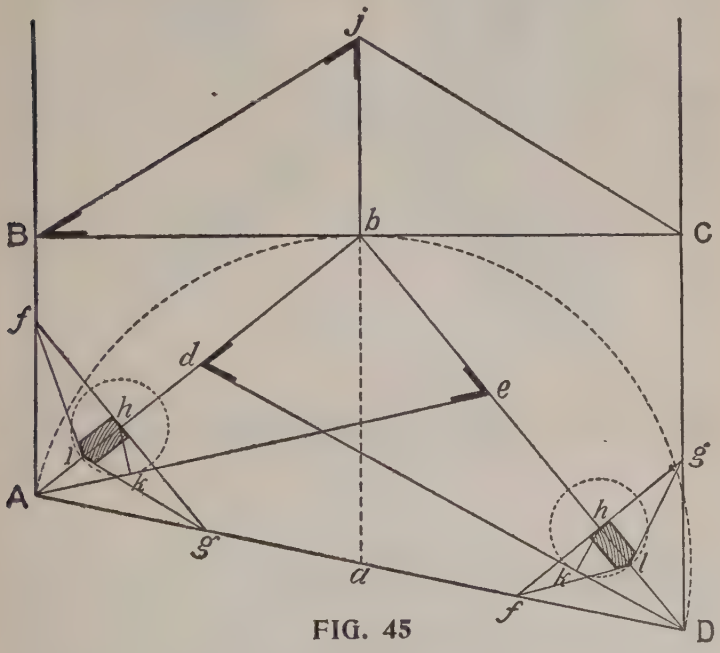

FIG. 45

k, and draw kh perpendicular to Ae. Through h draw fhg perpendicular to Ab, meeting AB, AD, in f and g. Make l equal to hk, and join fl, gl; then flg is the backing of the hip.

How to Find the Shoulder of Purlins.—Fig. 46 shows how to find the shoulder of purlins:

First, where the purlin has one of its faecs in the plane of the roof, as at E. From c as a

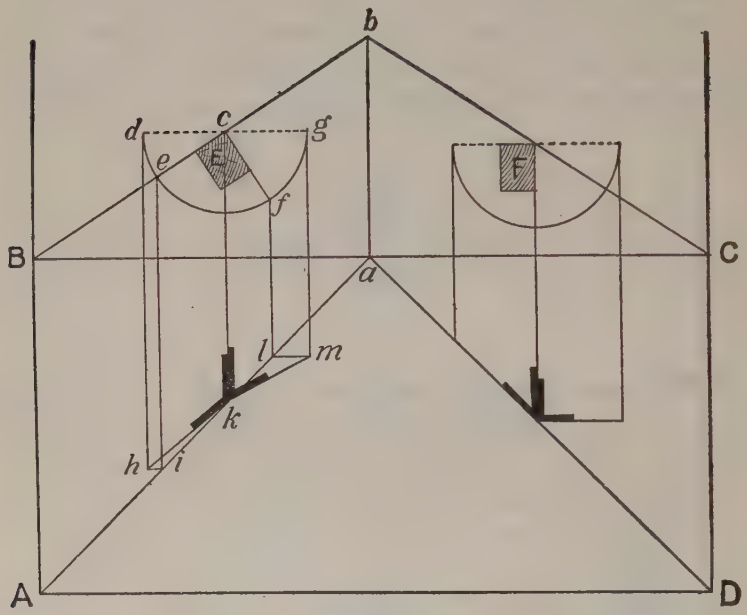

FIG. 46

center, with any radius, describe the arc dg; and from the opposite extremities of the diameter, draw dh, gm perpendicular to BC. From e and f, where the upper adjacent sides of the purlin produced cut the curve, draw ei, fl parallel to dh, gm; also draw ck parallel to dh. From l and i draw lm and ih parallel to BC, and join kh, km. Then ckm is the down bevel of the purlin, and ckh is its side bevel.

When the purlin has two of its sides parallel

to the horizon. This simple case is worked out at F. It requires no explanation.

When the sides of the purlin make various angles with the horizon. Fig. 47 shows the ap-

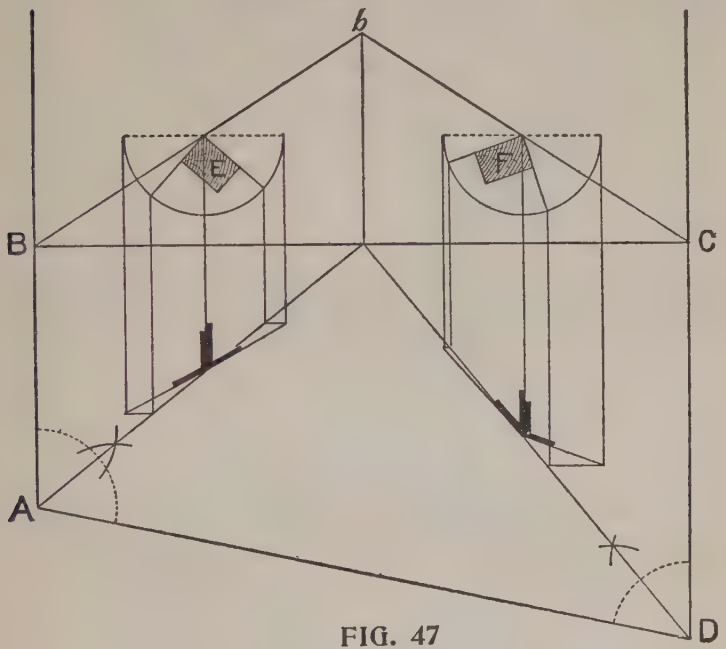

FIG. 47

plication of the method described in Fig. 46 to these cases. See also Fig. 49.

How to Pierce a Circular Roof With a Saddle Roof.—It somtimes happens, particularly in railroad buildings, that the carpenter is called upon to pierce a circular or conical roof with a saddle roof, and to accomplish this economically is often the result of much labor and perplexity if a correct method is not at hand.

The following method, shown in Fig. 48, is an excellent one, and will no doubt be found useful in cases such as mentioned.

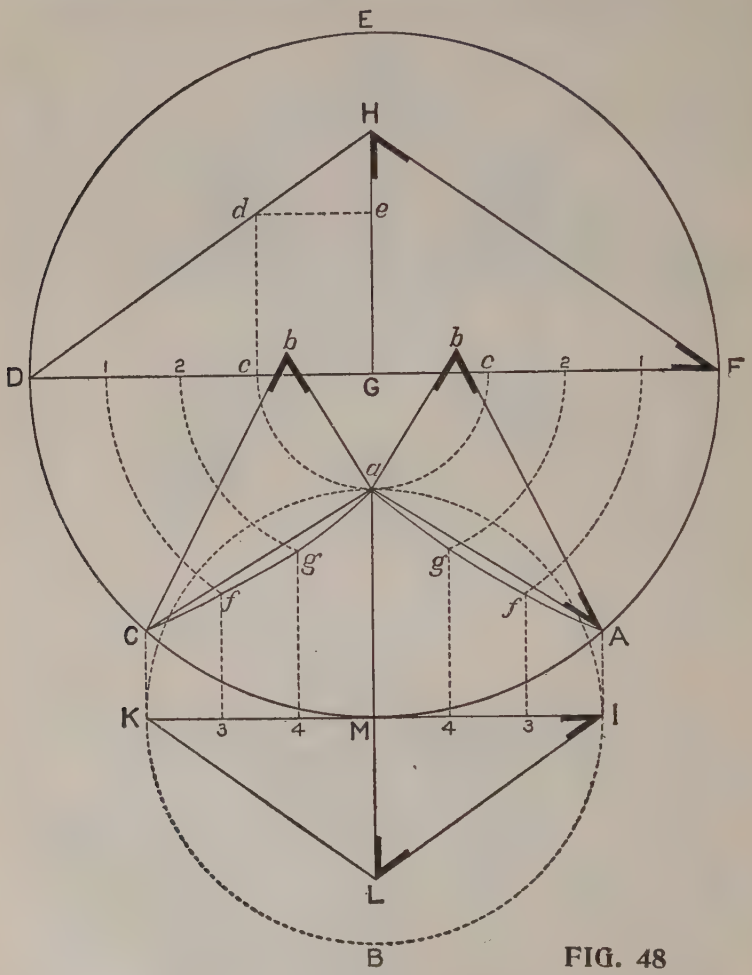

FIG. 48

Let DH, FH, be the common rafters of the conical roof, and KL, IL the common rafters of

the smaller roof, both of the same pitch. On GH set up Ge equal to ML, the height of the lesser roof, and draw ed parallel to DF, and from

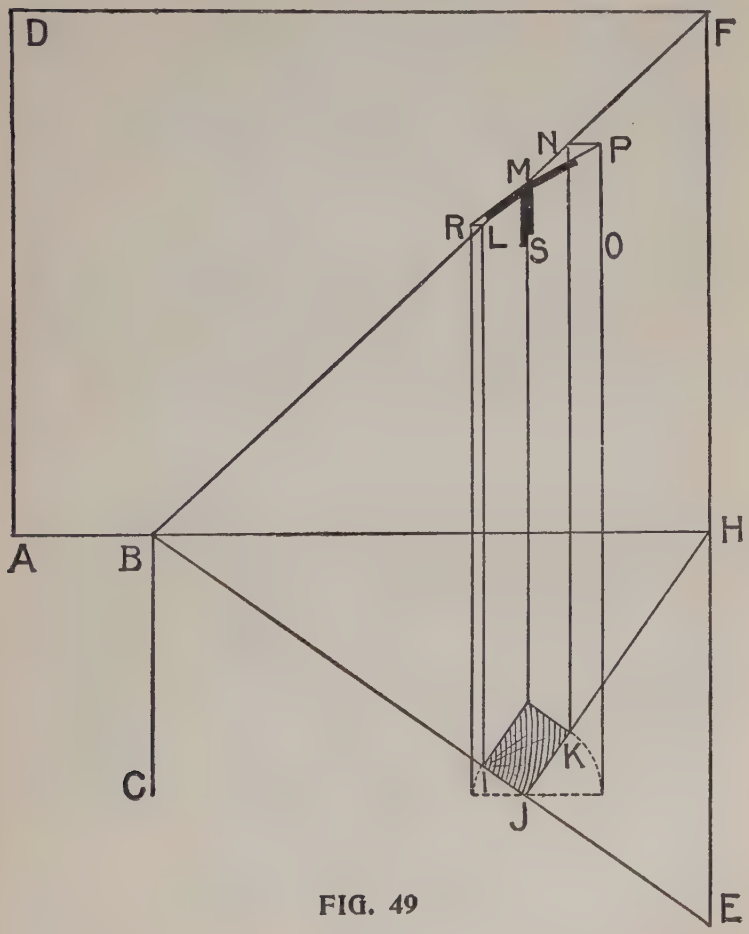

FIG. 49

d draw cd perpendicular to DF. The triangle Ddc, will then by construction be equal to the

triangle KLM, and will give the seat and the length and pitch of the common rafter of the smaller roof B. Divide the lines of the seats in both figures, Dc, KM, into the same number of equal parts; and through the points of division in E, from G as a center, describe the curves ca, 2g, 1f, and through those in B, draw the lines 3f, 4g, Ma, parallel to the sides of the roof, and intersecting the curves in fga. Through these points trace the curves Cfga, Afga, which will give the lines of intersection of the two roofs. Then to find the valley rafters, join Ca, Aa; and on a erect the lines ab, ab perpendicular to Ca and Aa, and make them respectively equal to ML; then Cb, Ab is the length of the valley rafter.

In Fig. 49 is shown another method of finding the bevels of the purlins at the hip or valley.

Let ABC be the eaves of roof, DF and FE the ridges, BF the valley or plan, HE the rise and BE the pitch of roof. Mark the purlin IJK to a large scale—full size if possible—and draw IL, JM, and KN all parallel to EF; make SO equal to JK; draw OP, and draw NP parallel to DF; join MP; and the bevel SMP will apply on the side of purlin. Make RS equal to JI; draw LR; and the bevel SMR will apply on top of purlin.

Illustration of Roof Pitches.—Notice the illustration in Fig. 49a, for it contains a whole volume in roof framing. The explanation of the figure is as follows:

In this illustration we show a line for every

inch on the blade; or, in other words, for each inch in rise to one foot of run. Twelve on the

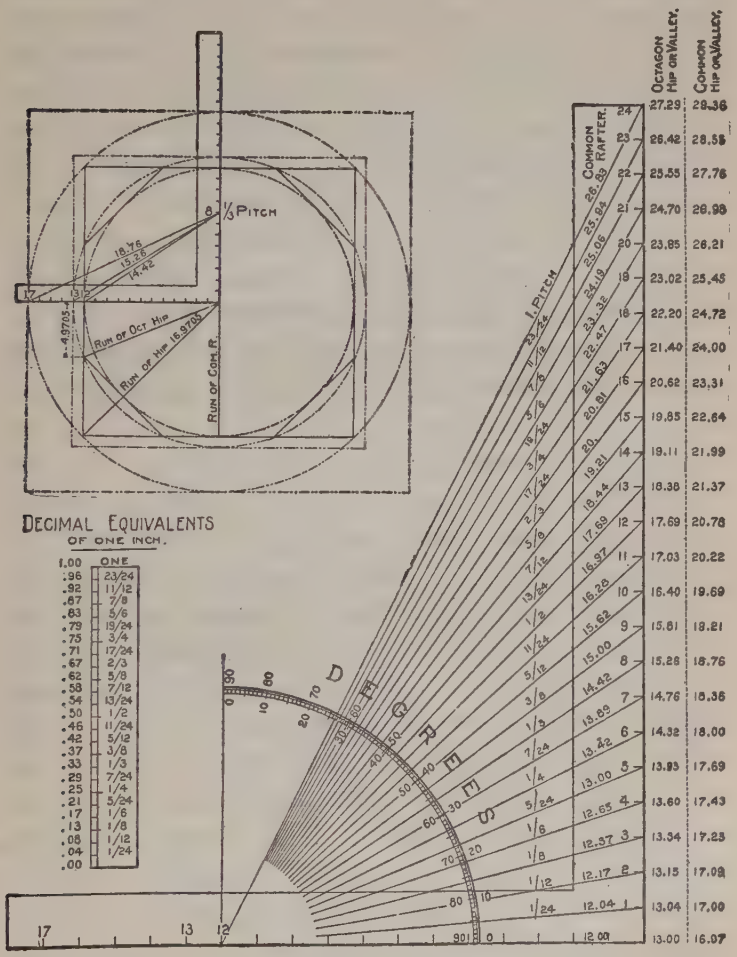

FIG. 49 A

tongue represents unity, because 12 inches is one foot; and since the run is 12 inches, the span

must be double the run, or 24 inches, which is the length of the blade of the square. Then the first inch in rise on the blade must be that proportion to its own length, and produces one-twenty-fourth pitch, the second inch, one-twelfth pitch, the third one-eighth pitch, and continue to the twenty-fourth inch, when it becomes full. The twenty-fifth inch rise would therefore be one and one-twenty-fourth pitch, which is simply a repetition of the above pitches with a one prefixed till it gets up to 48 inches, when it takes on another pitch and represents two pitches, and continues on and on, getting fuller and fuller, but would never stand straight up, because the run remains the same.

The fractional pitch lines for the common rafter are shown for each inch in rise up to the full pitch, and their lengths are expressed in decimal figures to the one-hundredth part of an inch, while to the right of the blade the same is expressed for the corresponding octagon and for the common hip or valley for a square-cornered building, which are reckoned from 13 and 17 on the tongue respectively. However, neither is absolutely correct, though near enough as far as the cuts are concerned. The greater deviation being in the hip for the square-cornered building. It lacks .0295 of being 17 inches and represents the run of the hip to a 12-inch run of the common rafter. Its true length being 16.9705 inches, this is the length from which we have reckoned for the lengths of the hips instead of 17, as is the

usual custom. This may seem a trifling difference, and so it is in a short run and low pitches; but suppose it is for iron construction. To begin with, the shortage of each foot in run with the common rafter is .0295 of an inch; added to this the gain it would have in the pitch, which would be .015 of an inch by the time it got up to the full pitch for the common rafter; and this added to the .0295 to start with would be a difference of .0445 of an inch to the foot in run with the common rafter. Now supose the run to be 18 feet; 18 x .0445 = .8+, or 19-24 of an inch difference; or, if no account was made of the gain in pitch, the .0295 of an inch in the run would amount to over half an inch in the length of the hip alone. This is a common error and while it is not much and probably would never be noticed in wood construction, it is well to know this discrepancy and guard against it when the occasion demands, and for that reason we give the correct amounts. The shortage in the octagon is not so pronounced. Instead of it being in the run, it is the tangent that is lacking the same amount, it being 4.9705 instead of 5 inches. This coming as it does cannot affect the length of the rafter nearly so much as in the above.

We explain this shortage better by referring to that part of the illustration in Fig. 49a showing the plan of a combination square and octagon frame with the heel of the steel square resting at the center. From this it will be seen that the two outer circles catch the corners of the frame

and seemingly intersecting the tongue at 13 and 17 and represent the figures to use on that member for the seat cuts, but the true length of the run of the hip is 16.9705 and that for the tangent of the octagon is 4.9705.

Reckoning by Degrees.—Angles are formed by the divisions of the circle, called degrees, of which it contains 360, and these parts are again divided into 60 parts, called minutes, and these parts are again divided into 60 parts, called seconds. From this it will be seen that there are many fractional parts, and if used for the pitches would result in fractions in the lineal measurement of the rise given the roof. Only the 45 degree is without a fraction on the blade of the square when using 12 on the tongue. Besides, there is no way of arriving at the measurement of same without a problem of no small means in trigonometry or the use of a protractor to arrive at the desired angle from which to take the measurements by scale.

In looking up the subject we fail to find pitch as applied to the roof defined in any of the encyclopedias other than by the degrees given the incline of the roof. Therefore, it is more than probable, to avoid these troublesome fractions, custom has settled on taking a proportion of the span for the rise. Thus, knowing the measurements of two of the factors (run and rise), the third (pitch) is easily arrived at by scale and from their measurements, the various angles for the cuts may be obtained with the steel square with-

out the knowledge of the degrees entering into the problem.

Table of Decimal Equivalents.—In connection with this illustration we also give in Fig. 49a, a table of decimal equivalents to the one-twenty-fourth part of an inch for convenience in finding their value in common fractions.

Framing by Degrees.—A common measurement for angles is by degrees, and this method has its advantages and will be found useful in this line of work.

In some sections of the country with many framers, the rise is reckoned by the degree instead of a rise in proportion to the span. The rules in the application of the square for the cuts and bevels remaining the same, but in degree framing it requires a trigonometric formula, or a protractor, to determine the rise. In the absence of the protractor one may be temporarily devised as shown in Fig. 50, as follows:

Lay off an angle of 90 degrees, which may be done by marking from the heel of the square along both the blade and tongue. The square, we will say, being in the position of No. 1, and with the angle as center lay off a quarter circle, the radius of which may be any size desired, the larger the more accurate will be the result.

Now reverse the square, as shown by the square No. 2, and with the 12-inch mark on the tongue resting at the heel or angle of square No. 1. A line from 12 to 12 will bisect the quarter circle at an angle of 45 degrees. Now with a pair of spacers divide the arcs thus formed into nine

spaces, which will make the divisions five degrees apart, and by dividing these spaces into five

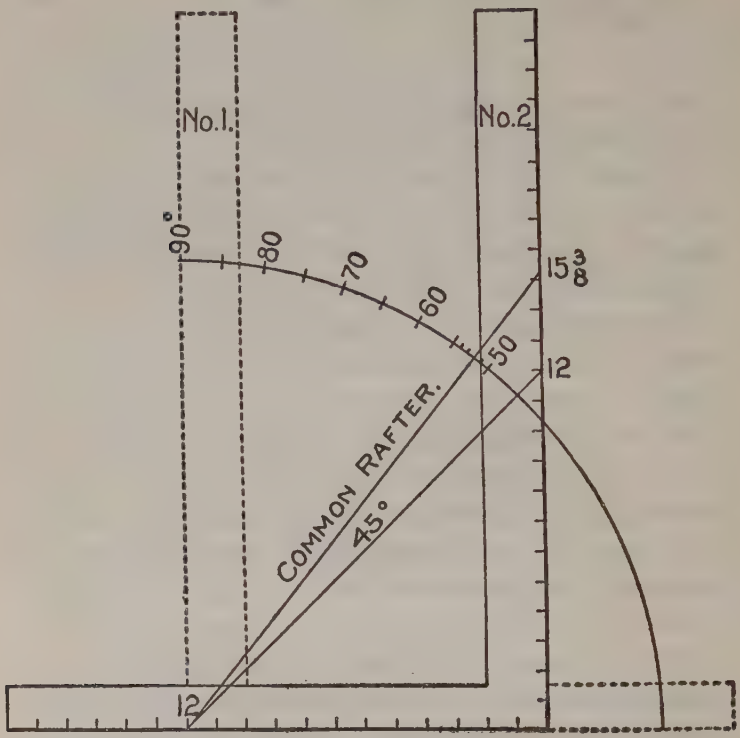

FIG. 50

equal parts will give the division of the degrees. However, it is only necessary to divide that section containing the desired degree. If it be 52 degrees then we divide the space above 50 degrees, as shown, and a line from 12 on the tongue and passing at 52 degrees will intersect the blade at $15\frac{3}{8}$ inches and represent the rise per foot in the run.

In Fig. 51 is shown a diagram of how to find the lengths of the rafters to a given scale, also

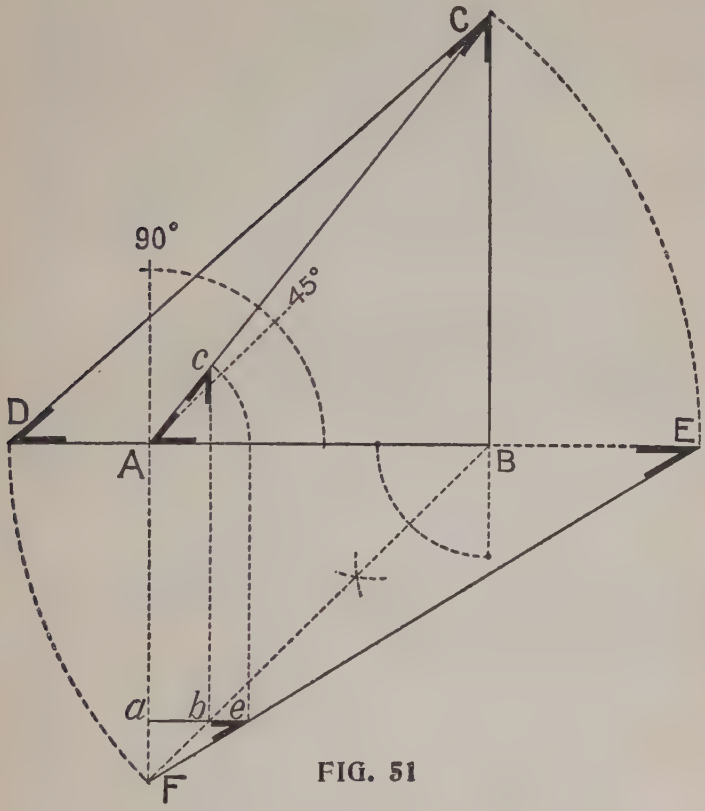

FIG. 51

the bevels that give the cuts. The square may be applied to the angles instead of the bevels, if desired.

Without going further into the details of the construction of this diagram we will give the different parts as follows:

Let AB represent the run or seat of the common rafter, and with A as center lay off the arc and proceed as in Fig. 50 for the pitch. BC will represent the rise, AC the length of the common rafter, BF the seat or run of the hip (this line always rests at an angle of 45 degrees with AB, unless the adjoining sides of the roof are of a different pitch), and equals DB. DC represents the length of the hip and equals FE, the latter being drawn to obtain the bevels for the cuts. AE is obtained by dropping AC on a line with AB.

a, b represents the run of the first jack from the corner, and by squaring up to AC, as shown, its length will be Ac, and represents the common difference in the lengths of the jacks. The seat and down bevels remain the same as for the common rafter, but require an additional bevel across the back to obtain the cut to fit against the hip. This is found by extending ab, intersecting FE, as shown, at e.

It will be seen that ae equals Ac, and may, therefore, be taken for the length of the jack.

For the backing of the hip, lay off one-half of its (the hip's) thickness from D on line DB (seat cut) will give the gauge line or the amount to remove to a center line at top of the hip.

Octagonal Roofs.—Fig. 52 represents an octagonal roof. In its construction the suggestions following, on octagons, must be referred to.

To find the side of an octagon when the side of the square is given. Multiply the side of the

square by 4.97 and divide by 12. The quotient is the side of the inscribed octagon.

To continue with an octagon roof; the length of hips is found as usual from rise and run, the run being half the diagonal of the octagon. Cut

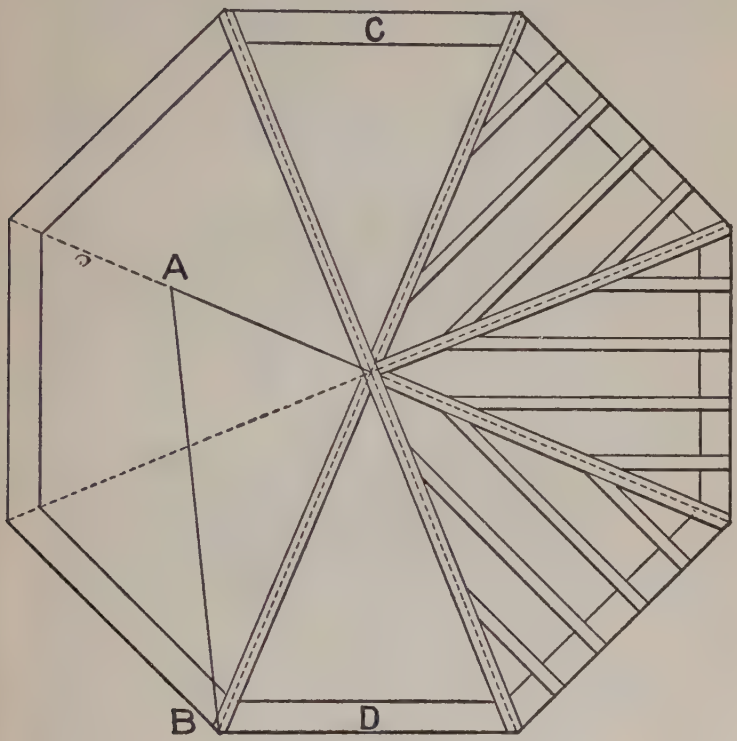

FIG. 52

the first pair full length to butt against each other; the next pair are to be set up at right angles to these, and each is to be cut shorter than the first pair by half the thickness of first

pair, measured square back from the down bevel. The third and fourth pairs are to be cut shorter than the first by half the diagonal of a square whose side is the thickness of the first rafters. If the thickness of the first pair is 2 inches, then the third and fourth pairs are shortened by 1 and 5-12, as 2 and 10-12 is the diagonal of a square whose side is 2.

The first and second pairs have no side bevels; the side bevels of the third and fourth run back on both sides from the middle of the rafter. Find this bevel by taking the original length of rafter on blade and its run on the tongue, when the blade shows the cut. The backing of the hips obtain by taking 5-12 of the rise on the tongue and the length of hip on blade, the latter giving the bevel; for the side of an octagon is 5-12 its square width.

Half the square width is the run of the middle jack rafter, from which and its rise we get its length. From the length deduct the same amount as from the third and fourth pairs of hips. If there are to be two jacks between the middle one and the corner, we divide the length of side into three parts, also the rise, whence are obtained as before the distance of rafters apart, and the rise of the shortest jack. Divide half the square width of octagon by three to find the run of shortest jack. Just as the square is laid on to find the length of a jack, it gives the down and lower end bevels; while the side bevel is obtained by taking length of middle jack

on blade and half one side of the octagon on the tongue; the blade giving the cut.

Lengths and Bevels of Hips and Jacks.—The following illustrations will serve to make these points perfectly clear, in fact they are largely self-explanatory. They show the lengths and bevels of hips and jacks for an octagonal tower roof. The seat and plumb cuts are found in the usual way of taking the proportion of the run and rise on the tongue and blade but there must be an additional or diagonal cut across the back of the jack to fit against the hip, as shown in Fig. 53 by the dotted lines at A-B. These lines are always vertical and the same distance apart regardless of the pitch

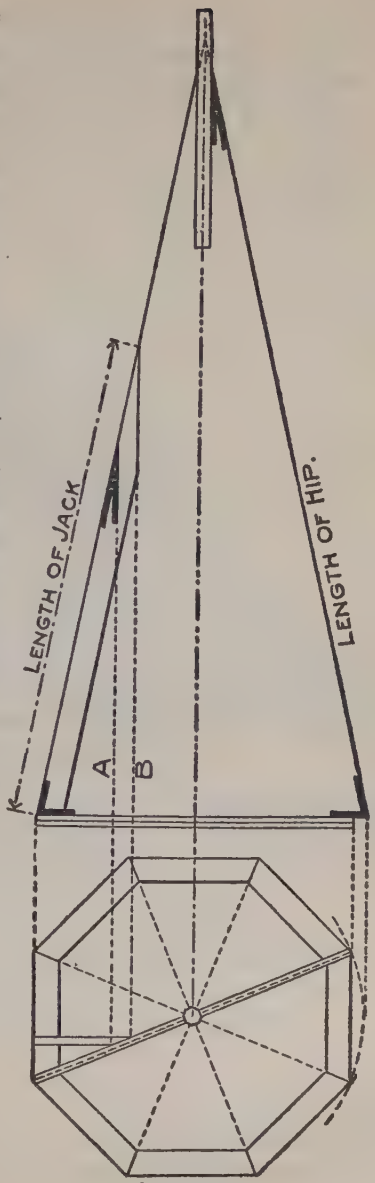

FIG. 53

given. A diagonal line from A to B across the back of the jack determines the angle.

Fig. 54 illustrates this point. If there were

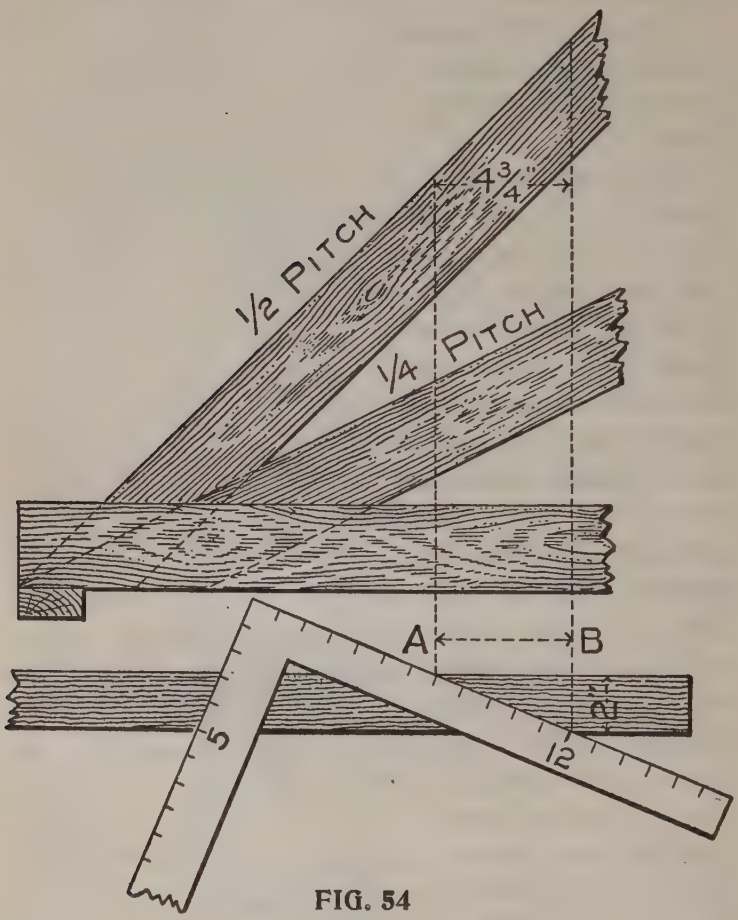

FIG. 54

no pitch at all then 5 and 12 would give the cut. These figures also give the starting lines A and B, which, since the rafters are of the same thick-

ness, will remain at right angles the same distance apart. Thus, if the rafter be 2 inches thick, the lines A and B will be $4\frac{3}{4}$ inches apart.

The jack cut may also be found as follows: Take 5 on the tongue and the length of the common rafter for one foot run on the blade, the blade giving the cut. Thus it will be seen that when the principles of roof framing are understood it is not necessary to lay out an

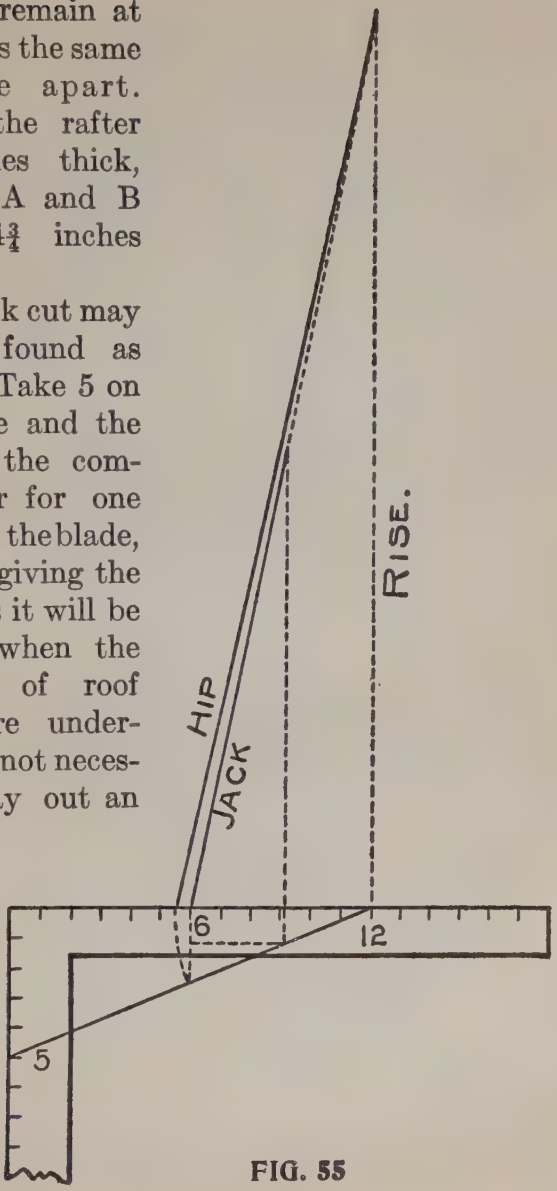

FIG. 55

elaborate diagram. A simple line drawing like that shown in Fig. 55 illustrates all that is contained in Fig. 53.

In the plan shown in Fig. 53 it will be seen that the hips do not come to a common center within themselves, but instead are resting against a center piece which may be a finial or flag pole, and in that case furnishes an excellent bracing for same, but when this is used the lengths of the hip must be shorter. The best way to obtain this is to find the full length of the hip and lay off the plumb cut and from this at right angles measure off one half the thickness of the pole, which will give the proper point of the plumb cut. When this pole is omitted the common way is to let one pair of the hips butt against each other as shown in Fig. 56. The runs are reckoned from the outer edge of the plates to the center, as GO for the common rafter and OF for the hip, but since all of the rafters do not run to the center there must necessarily be a deduction from the runs, as given above.

In the plan it will be seen that only one set of the hips (No. 1), meet at the center. Set No.2 lacks the thickness of No. 1 of coming together, or an amount equal to OA taken from the run of each rafter. The next two sets, No. 3, are of the same length, and the deduction for this is equal to OB plus BC to obtain the plumb cut for the side bevel. The run of the common rafter, No. 4, being GO the deduction from which is

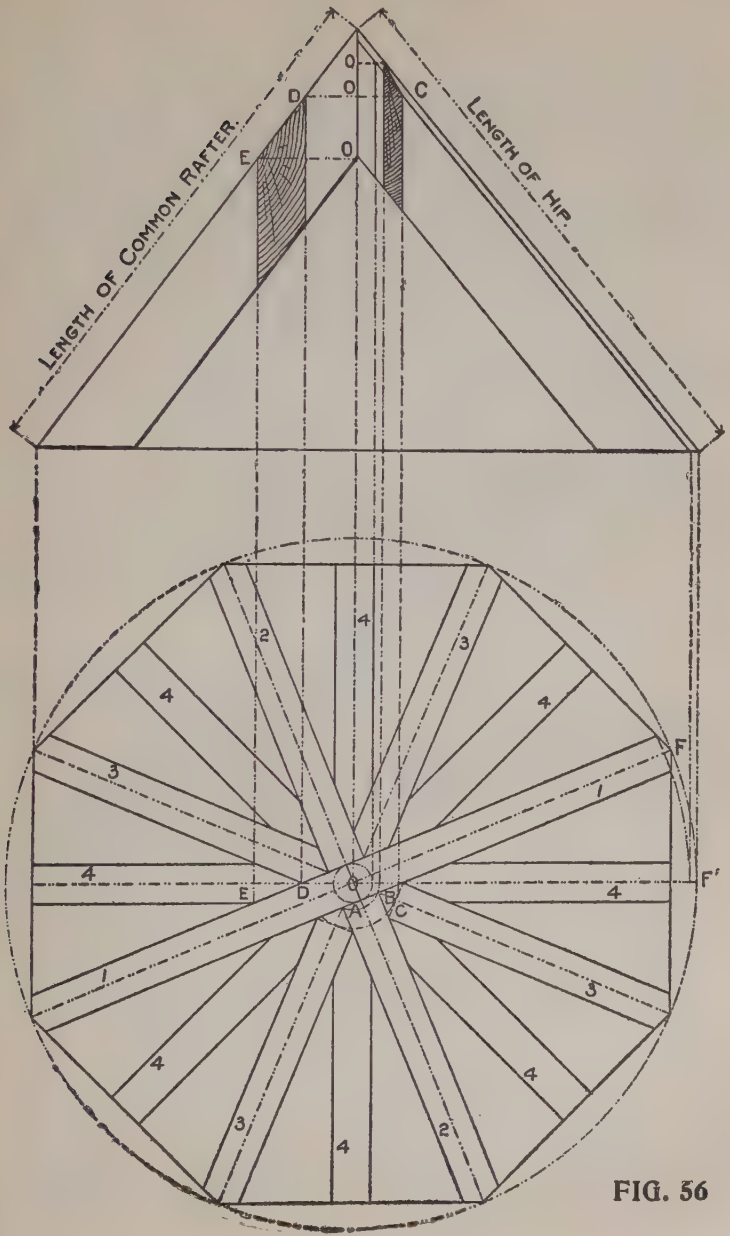

FIG. 56

equal to DO plus ED to obtain the plumb cut for the side bevel.

Now, referring to the elevation, the above reference letters are used for like measurements, showing the proper deductions to be made to obtain the lengths for the different rafters by simply squaring back the above amounts from the plumb cut for the full length rafter.

The run and rise taken on the square regulate the seat and plumb cuts, but the above deductions remain the same for any pitched roof.

To Obtain Length of Various Rafters for Any Width of Building.—In Fig. 49a, we gave an illustration showing the comparison of the runs of the octagon hip and for a hip resting on a square cornered building, to that for a one-foot run of the common rafter.

Now since these lengths taken diagonally from 12, 13 and 17 on the tongue to the figures designating the rise on the blade represent the lengths of the rafters for a one-foot run, it is an easy matter to find the lengths for any run by simply multiplying the lengths given by the number of feet and fraction of a foot in the run, and point off as many figures in the product as there are decimal figures in the solution and reduce to feet and inches. The finding of the length for a fractional part of a foot in the run may be avoided by finding the length only for the number of feet as described above and lay off a plumb cut, then from this measure square out the amount of the fraction, which will be the

point for the proper plumb cut. Or the calculation in figures for the whole length may be avoided by running the square as shown in Fig. 56a. In this is shown a rafter with a 6-foot 6-inch run and a 9-inch rise, or $\frac{3}{8}$ pitch. Apply the steel square six times as shown, then measuring

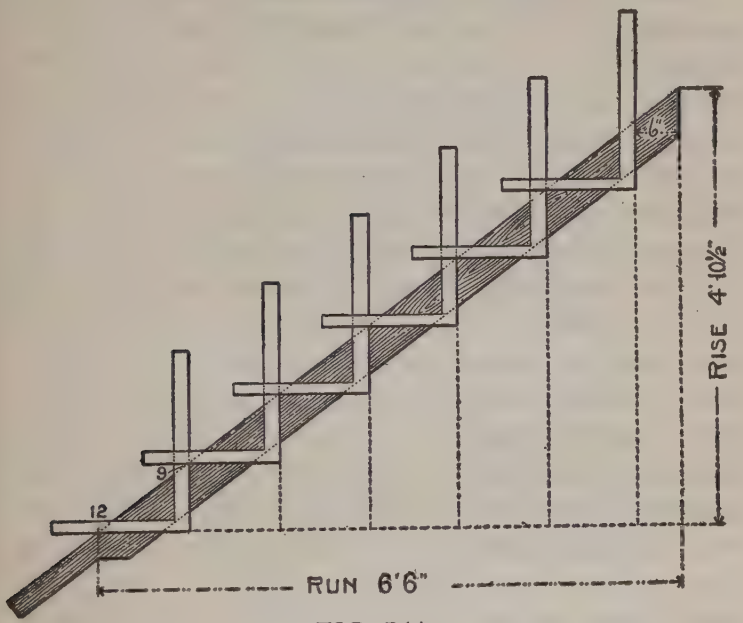

FIG. 56A

six inches square out from the last application of the steel square, will give the point for the plumb cut. Proceed in like manner for the corresponding hips, using the figures 13 and 17 on the tongue respectively for the octagon and common hip or valley, but instead of measuring six inches square out as for the common rafter, it

must be to the ratio of 13 and 17, as 6 is to 12 nches.

Therefore in this example, it would be $6\frac{1}{2}$ inches for the octagon hip and $8\frac{1}{2}$ inches for the hip, or valley, for the square cornered building.

In Fig. 56b are shown these proportions in connection with the steel square. The run of the hip for a square cornered building rests at 45 degrees from that of the common rafter and that for the octagon hip at $22\frac{1}{2}$ degrees. So then, we let the tongue of the square represent the run for the common rafter, and by laying off the diagonal lines to 5 and 12 (the figures that represent the degrees) on the blade, and by squaring up six inches to the right of the starting point (12 on the tongue) it will be seen the diagonal lines are cut at the center of their lengths.

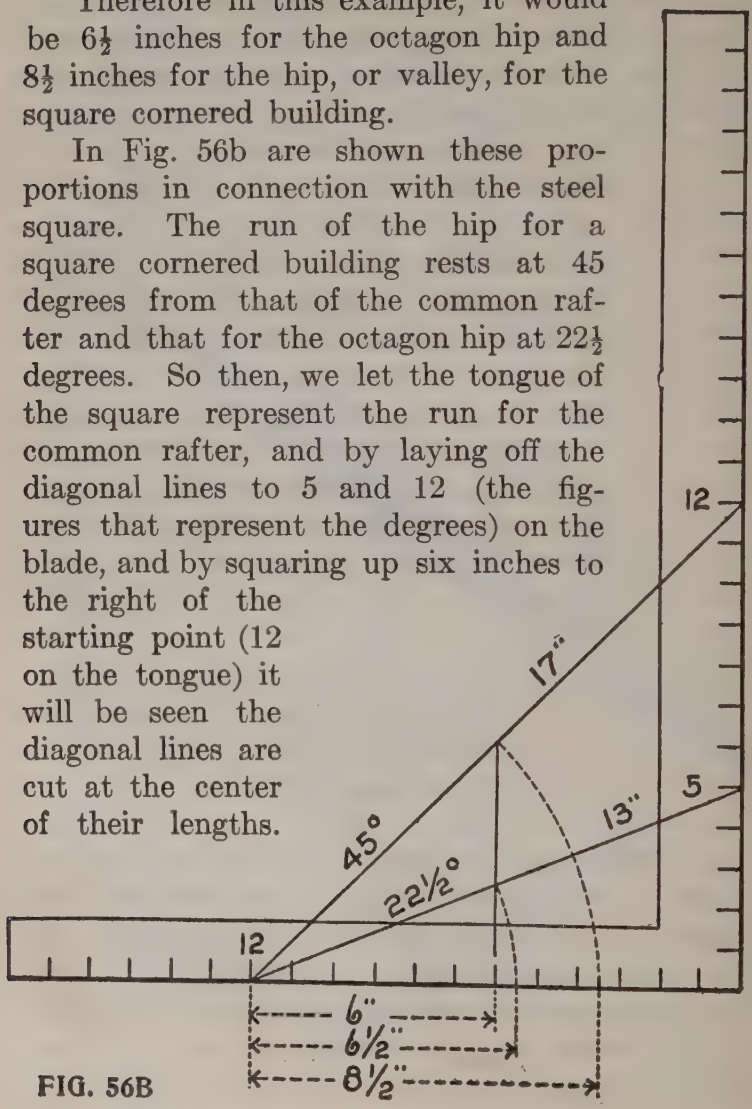

FIG. 56B

Therefore, one-half of their lengths represents the amount to square out to correspond with a six-inch run of the common rafter.

This proportion exists at any point that may represent the fraction of a foot in the run. If the fraction be one inch, the scale is then reduced to one-twelfth of the full size, and these lengths are simply read as twelfths inches, instead of inches.

Great care should be exercised in making measurements as shown in Fig. 56a, as it is a very easy matter to get off a little each movement of the square, and for that reason it is better to multiply the decimal lengths given in Fig. 49a.

For example we will find the length of the rafter shown in Fig. 56a. By referring to the table in Fig. 49a, we find the length for the common rafter to be 15 inches. Then $15 \times 6\frac{1}{2}$ (6.5)=97.5 inches, or 8 feet $1\frac{1}{2}$ inches. For the corresponding octagon hip, the length is 15.81 inches. Then $15.81 \times 6.5 = 102.765$ inches, or 8 feet $6\frac{3}{4}$ inches. Bear in mind that the 102 is inches and that 12 goes into 102 eight times and six over, making 8 feet 6 inches, and the .765 is only a fractional part of an inch and is equal to only a little over three-quarters of an inch. See table of equivalents in Fig. 49a. For the corresponding common hip or valley, the length is 19.21 inches. Then $19.21 \times 6.5 = 124.865$ inches, or 10 feet $4\frac{7}{8}$ inches. While the lengths, 15, 15.81 and 19.21, given above, represent the rafters for one-foot run, they may also represent the length of the

rafters for one-inch run, as before mentioned, and in that case the lengths given above would be so many twelfths of an inch and the decimal fractions would only be fractions of a twelfth of an inch. Thus, to find the lengths of the hip for a 7-inch run, would be 19.21 x 7=134.47 twelfths inches, equal to 11 2-12 inches. The .47 is discarded because it is less than one-half of a twelfth of an inch. This also applies to finding the common difference in the length of jacks. Since a jack is simply a part of a common rafter, it is only necessary to multiply the length of the common rafter (15) by the number of inches in the spacing and divide by 12, will give the answer. Thus—if the jacks be placed 16 inches on centers 15 x 16=240÷12=20 inches, will be the length of the first jack or the common difference for a roof with a 9-inch rise. As this example is without fractions, we will give another, taking that for the 8-inch rise or 1-3 pitch. In this, the length of the common rafter is 14.42. Then 14.42 x 16=230.72÷12=19 2-12 inches, and is the answer. To find the common difference for the octagon jack for the above pitch, proceed in like manner, but multiply 14.42 by 2.4 and the product by the spacing and divide by 12 will give the answer. Thus 14.42 x 2.4=34.608 x 16=553.728÷12=46 1-12 inches. The decimal fractions in the two last examples are discarded for the same reason as before described. These lengths are calculated to a center line at the ridge and at the center of the back of the hip or valley.

Therefore, reductions should be made from the lengths here calculated by squaring back from the plumb cut one-half the thickness of the ridge board, which will give the point for the proper cut for the common rafters and jacks that fit against same. For the jacks that fit against a hip or valley for a square cornered building, deduct one-half the diagonal thickness of the hip it rests against, by measuring square back from the plumb cut. Rafters are usually about $1\frac{3}{4}$ inches thick, and the proper reduction in that case would be practically $1\frac{1}{4}$ inches. However, the jacks will fit just as well though they will be one-half of their thickness out of their regular spacing, or if the measurement line is taken on the long side of the jack, then they will be of the proper length without any reduction.

Different Kinds of Jacks Described.—There are several kinds of jacks and while we are at this point it might be well to describe them. They are known by the position they occupy as follows: A jack with the upper end resting against a hip is called a hip jack. A jack with the upper end against the ridge board and the lower end against the valley is called a valley jack.

A jack cut in between a hip and a valley is called a hip and valley jack, or more generally known as a cripple jack. The latter in many cases is a very appropriate name, however, we prefer to call them by the former name.

In Fig. 56c is shown a plan of these jacks.

The measurement line is at the center of the back in each case and shows all of them to be for the same length of run, the dotted lines showing the amount of the reduction to be made to fit to their proper place. In this, it will be seen that the cut across the back of the jacks(commonly called side cut) is at an angle of 45 degrees

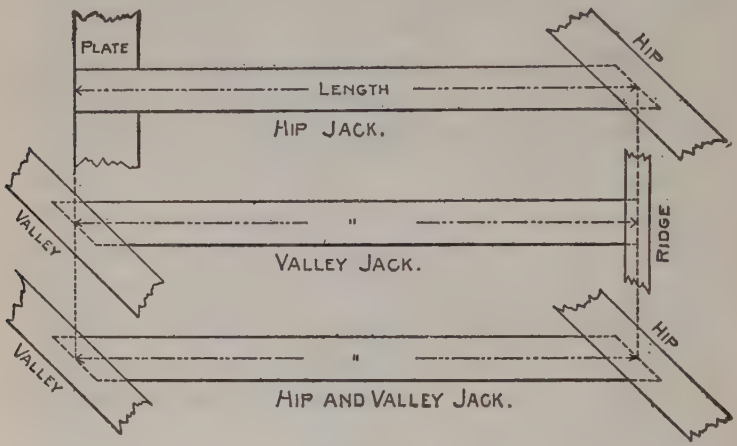

FIG. 56C

and this remains so regardless of the pitch given the roof. Therefore, the side cut of a jack, in one sense of the word, is a miter just the same as for a square-cornered frame. To prove this, after the side cut has been made for any pitch, cut off the peak end of the rafter on a line parallel with the seat cut and it will be seen that the angle is at 45 degrees, just the same as shown in the plan.

Hexagonal Roofs.—Take 6 and fifteen-sixteenths on the tongue and 12 inches on the blade,

and apply as shown in Fig. 57, and it will give the miter.

The side of a hexagon equals the radius of the circumscribing circle. The square width is

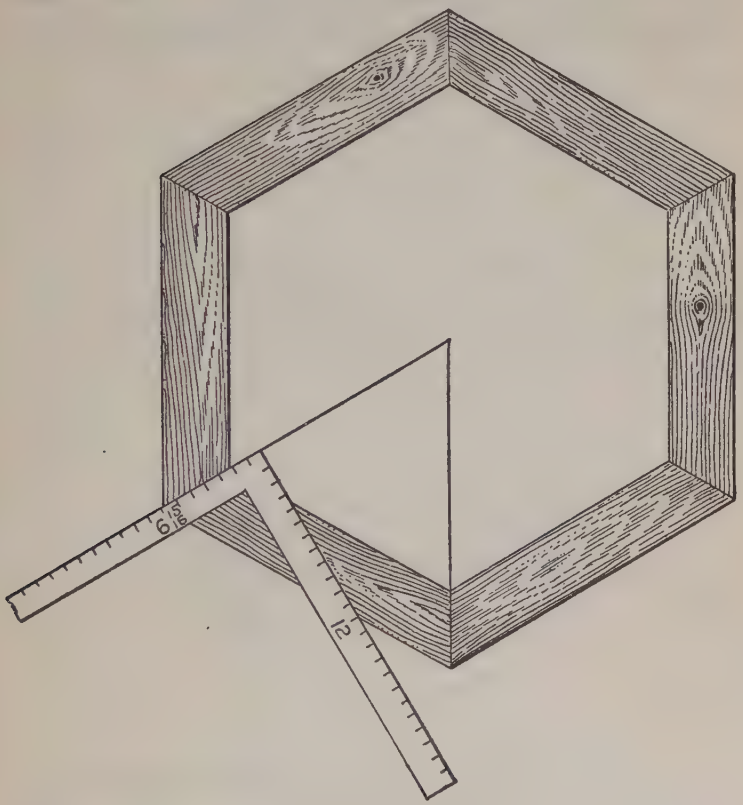

FIG. 57

determined from two parallel sides; a diagonal of the figure, is a line from opposite angles. The first pair of hips are set up as in an octagonal roof. The second and third pairs have a side bevel. To

find this, take half the side of the hexagon on the tongue and half the square width added to the gain of the hip-rafter in running that distance, on the blade. The tongue gives the cut. Strike the bevel across the rafter. Now, the second and third pairs are to be measured back

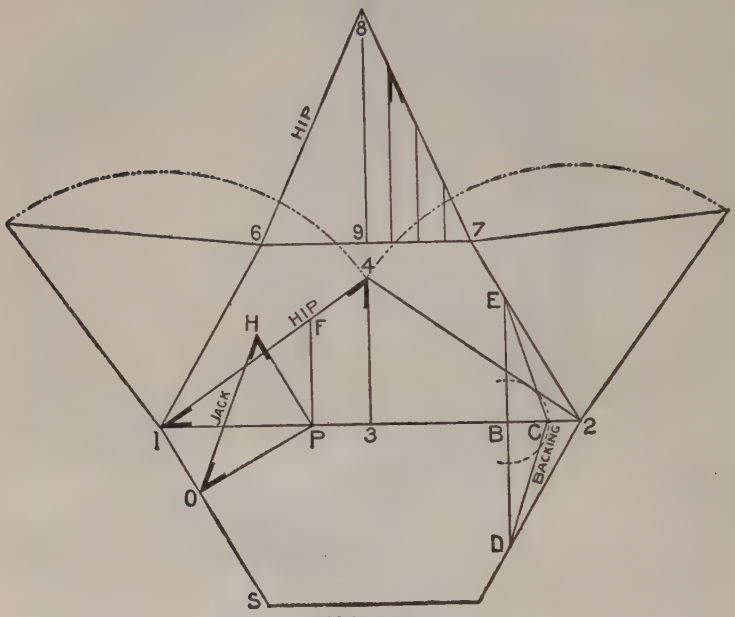

FIG. 58

shorter than the first pair, on their middle lines, just half the length of this bevel. The third pair has the bevel cut on both sides from the center. The backing of the hips is found by taking 7-12 the rise of roof on tongue and the length of hip on blade; the latter gives the cut. The side of the hexagon is 7-12 its square

width, or apothegm. The lengths and bevels of the jack-rafters are found as in octagonal roofs.

To Timber a Hexagon Roof.—On the line 1-2, Fig. 58, is the seat of the hips, 3-4 will be the rise. On the line 1-S say at O, draw a line at right angles touching the line 1-2 at P which is the seat of a jack rafter. From O-P at right angles draw P-H equal to P-F, and connect OH: this gives the length, seat and plumb cut of jack rafter. From 6-7 draw the line 8-9 indefinitely; set the compasses to 1-4, which is the length of the hip, and this length at 6 intersect 9-8 at 8, repeat from 7, which is the covering for one side of the roof, the intermediate lines being the lengths of jack rafters and bevels for side cut. On the line 1-2, say at B, take B for a center, touching the line 4-2, for radius, describe the arc BC; through B, at right angles to 1-2, draw the line DE, and from C to E and C to D will be found the bevels for backing the hips.

Part VI

HOPPERS AND HOPPER BEVELS

Laying Out Hopper Bevels with a Square—The Various Classes of Hoppers—Methods of Finding the Bevels and Width of Sides and Ends of a Square Hopper—Rule for Finding the Bevels for the Butt Joint of the Hopper—Cuts and Bevels for Flaring Hopper—Angles and Bevels for Hopper Work—Miters—Methods of Finding the Miter—Trusses—Tower for Windmill, etc.

Laying Out Hopper Bevels With the Square.—The subject of hopper bevels is one that is not generally understood among workmen. We have known good mechanics who could frame complicated hip and valley roofs but when it came to laying out hopper bevels with the square, they were, so to speak, at sea. Yet the same principle involved in the framing of a hip-roof applies to a hopper—that is, a hip-roof inverted is a hopper. The roof boards that fit in the valley over the hip form the hopper joint. However, there are many ways of arriving at the cuts, and we will here present the views of various writers on the subject; many have been published before, but we give them here because the progressive mechanic is not a "one way man," but wants to know the different ways of obtaining the same result, from which he can select the way that best suits his purpose. The following illustra-

tions in Figs. 59 to 64 represent the various classes of hoppers.

Fig. 59 represents a cottage, the roof of which is an inverted hopper.

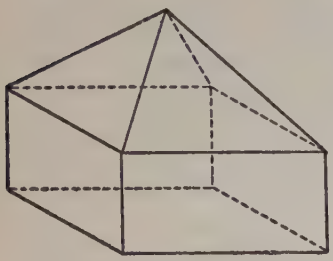

FIG. 59

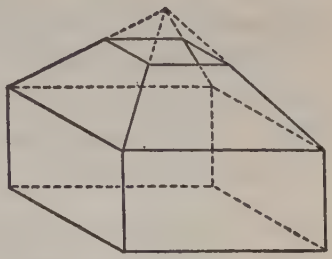

FIG. 60

Fig. 60 represents the same, showing the roof part only, with the apex taken off, which may be the bottom of the hopper.

Fig. 61 represents the hopper in its natural position.

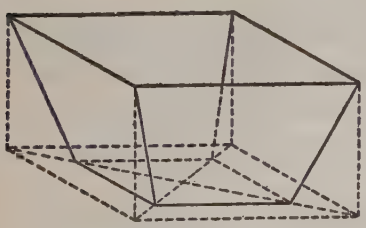

FIG. 61

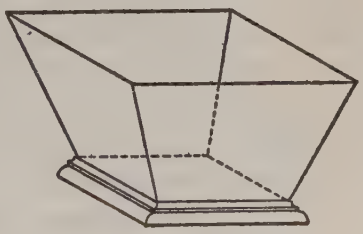

FIG. 62

Fig. 62 represents a rectangular hopper with projecting bottom piece, and Figs. 63 and 64 represent the same for the triangular and hexagonal hoppers.

The following method of finding the bevels and width of sides and ends of a square hopper is from Mr. Connell.

In Fig. 65 the large square represents the upper edges of the hopper and the small one the lower edges or base. The width of the sides and ends is found in this way: Take the run ab on the tongue, and the perpendicular height ad on the blade. It is thus found in the same manner as the end of a brace. To find the cut for a butt

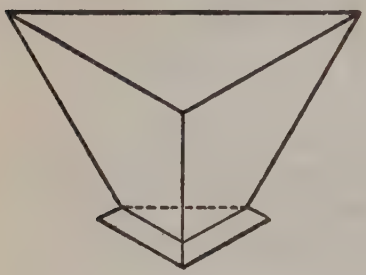

FIG. 63

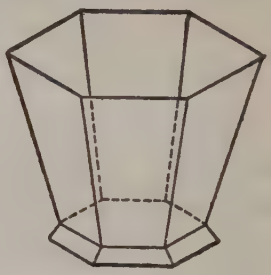

FIG. 64

joint, take the width of side on blade and half the length of the base on tongue; the latter gives the cut. For a miter joint take width of side on the blade and perpendicular height on tongue; the latter gives the cut.

For the cut across the sides of the boards, take the run ab on the tongue, and the width of side on blade; the tongue gives the cut. In case of butt joints the inside corners of the sides and ends are longer than the outside, so if a hopper is to be of a certain size, the lengths of ends and sides are to be measured on the inside

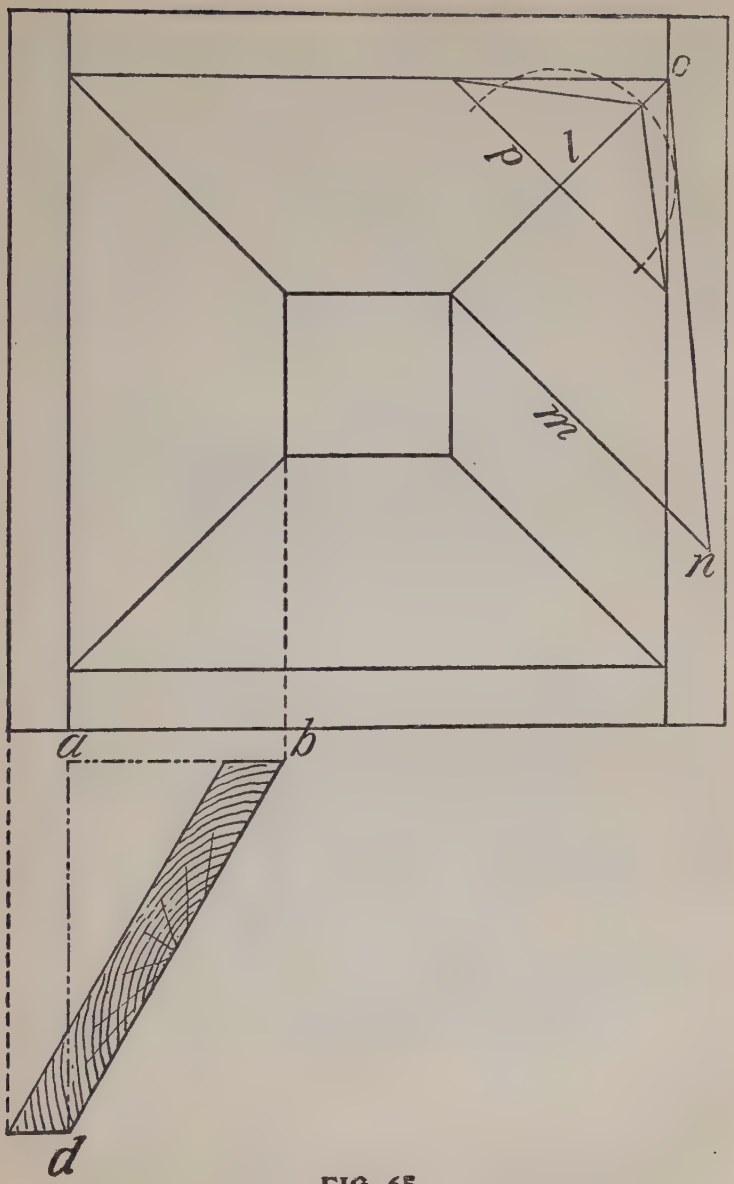

FIG. 65

edge of each piece, and the bevels struck across the edges to these marks. Of course if the hopper is to be square, the thickness of the sides must be taken from the ends.

If the top and bottom edges are to be horizontal, the bevel is thus found: Take the perpendicular height of hoppers on the blade and the run on the tongue, the latter gives the miter cut, in other words it is the 45 degree angle.

In large hoppers, pieces are put down along the corners to strengthen them. The length,and the bevel to fit the corner are thus found: Suppose the top of hopper is 8 feet, and the bottom 18 inches square. Find the diagonals of each, subtract the one from the other, and half the remainder is the run for the corner piece. From the length of this run, L, and the rise, ad, we find the length of the corner piece. To find the bevel or backing, take on the blade the length of the corner piece and on the tongue the rise; the latter gives the bevel. Another method is to draw the line, L, to represent the seat of the corner piece, set off square with this the line m, of the same length as the rise, ad. Then draw n-o, which is the length of the corner piece. To find the backing, draw a line, p, anywhere across L, strike a circle tangent to n-o. From the point of intersection of the circle with L, draw lines to the extremities of p. The angle made by these lines is the bevel or backing. From this it can be readily seen that the principles involved

are the same as those for finding the length and backing of the hip rafter.

Another method generally employed for finding the bevels of hoppers is to bevel the top and bottom edges of the sides and ends to the angle they are to stand at, then to lay a bevel set to a miter, or angle of 45 degrees, on the beveled edge, and that will lay off a miter joint, while a try-square will lay off a butt joint; otherwise an angle of 45 degrees will miter only those boxes with sides which are vertical and square with each other.

When a hopper has the sides and ends of different widths, that is, when sides and ends stand at different angles, both having the same rise, find the cuts for each from its respective rise, run and width.

In the preceding it has been shown how the bevels and lines for hoppers may be obtained by the aid of the square, and it is now proposed to show how the same results may be obtained by a system of lines. This method, in many shapes and forms, has been used from time immemorial by workmen, more particularly by carriage makers to obtain the bevels of splayed seats; the present way of expressing it is, however, comparatively recent. If we make Al, Fig. 66, represent the elevation of our hopper, and Bl a portion of the plan, we proceed as follows: Lay off NS, which is the bevel of one side, and NSPO the section of one end.

Place one foot of the dividers at N, and with

NS as radius describe the arc SU, intersecting the line NU in the point U. At S erect the perpendicular ST, and draw the line UT at right angles to NU. Connect N and T; then the triangle MNT is the end bevel required. The line NT is

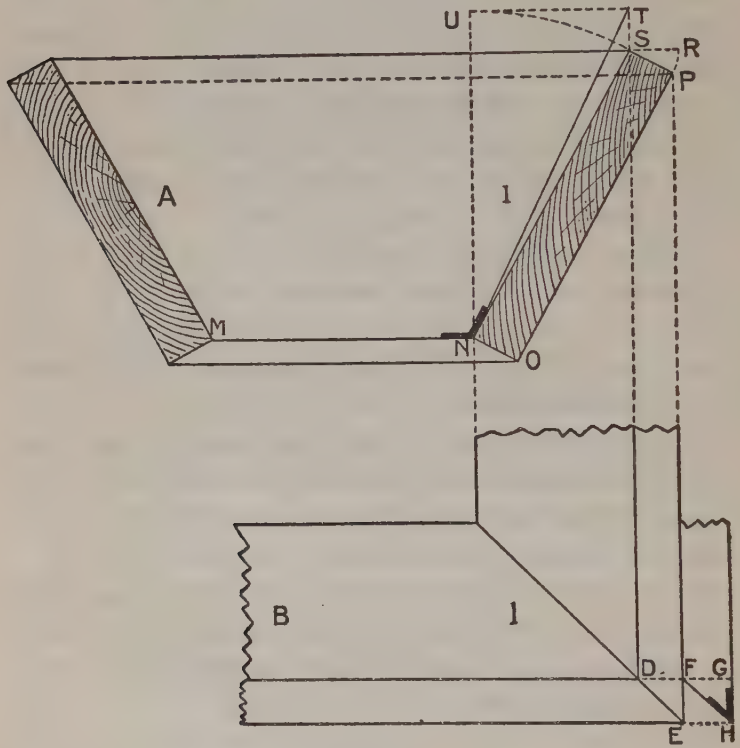

FIG. 66

the hypothenuse of a right-angled triangle, of which NU may be taken for the perpendicular and UT for the base. To find the miter of which DE is the plan, project S and P, as indicated in the plan by full lines. With SP as radius and

S as center, describe the arc PR. In the plan draw DG, on which lay off the distance SR, measuring from F, as shown by FG. Then GHF is the miter sought.

Fig. 67 shows the rule for finding the bevels

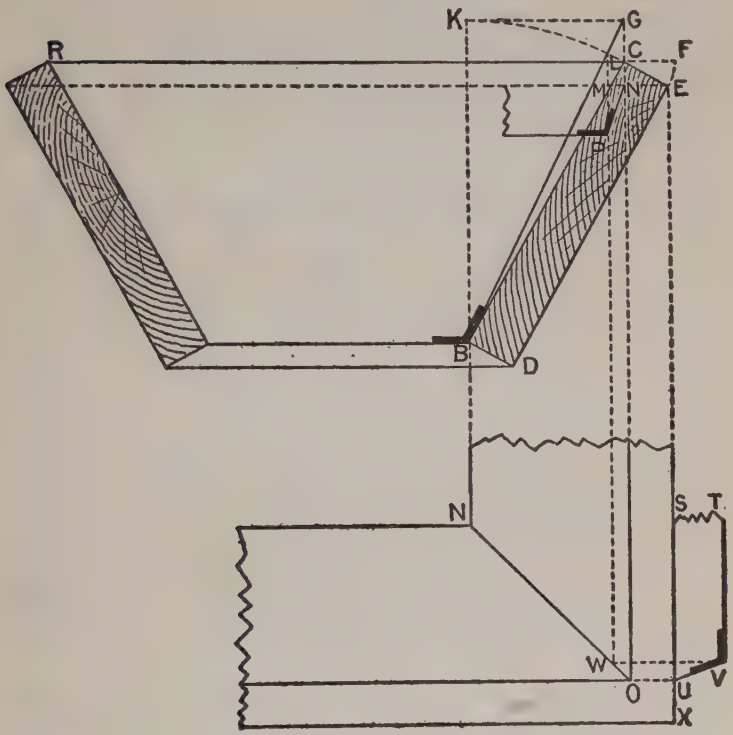

FIG. 67

for the butt joint of the hopper. From M, the point at which EM intersects BC, or the inner face of the hopper, erect the perpendicular ML, intersecting RF, or the upper edge of the hopper, in the point L. Then LC shows how much longer

the inside edge is required to be than the outside. In the plan draw TV parallel to SX, making the distance between the two lines equal to CF of the elevation, or, equal to the thickness of one side. From the point L in the elevation drop the line LW, producing it until it cuts the miter line NO, as shown at W. From W, at right angles to LW, erect a perpendicular WV, meeting the line TV in the point V. Connect V and U; then TVU will be the angle sought. This bevel may be found at once by laying off the thickness of the side from the line EM, as shown by NP

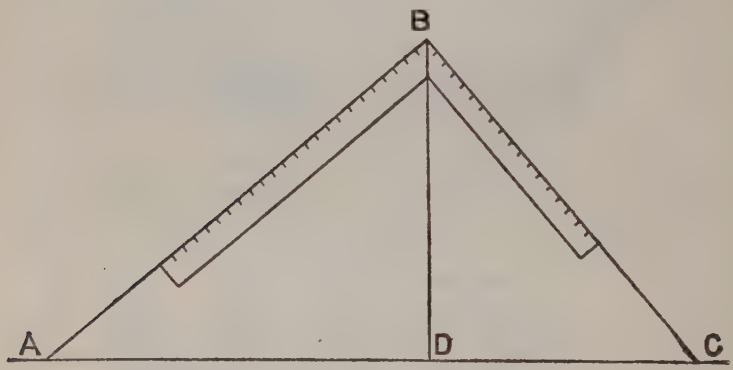

FIG. 68

in the elevation, and applying the bevel as shown. This course does away with the plan entirely, provided both sides have the same inclinaton.

There are several other ways by which the same results may be obtained, and some of these will no doubt occur to the reader when laying out the lines as shown here.

In Fig. 68 is shown another method for finding

the bevels for a square or rectangular hopper. Let AB always be the guiding line, and the one from which all the others take their positions, making that line equal in length the width of the side of the intended hopper.

To find bevel to cut across face of board: Take AB on blade and AD on tongue; bevel of tongue is the line required.

To find miter: Take AB on blade and BD on tongue, line of tongue is bevel sought.

For butt joint: Take BC on blade and AD on tongue, and line of tongue gives bevel required.

Cuts and Bevels for Flaring Hopper.—In order to make this department complete, we herewith give a method by which the cuts or bevels may be obtained for a flaring hopper having only three sides. In other words, Fig. 69 gives bevels for a box whose top and bottom form two unequal equilateral triangles: Make the triangle CEF, then from the middle point of EF let fall the perpendicular BD, then draw AB parallel and equal to CD, also AC parallel and equal to BD, thus forming the rectangle A, B, C, D. Now draw CH to the same inclination from CD, that a side of the box when finished will show from the perpendicular line; then draw LD perpendicular to CH, and, with C as a center and a radius CL, make an intersection at I, and connect I and A, and at A is the bevel for the miter at the ends. Again with D for a center and a radius DL, make an intersection at K, and connect K

and B; and at B is the bevel for the down or cross cut.

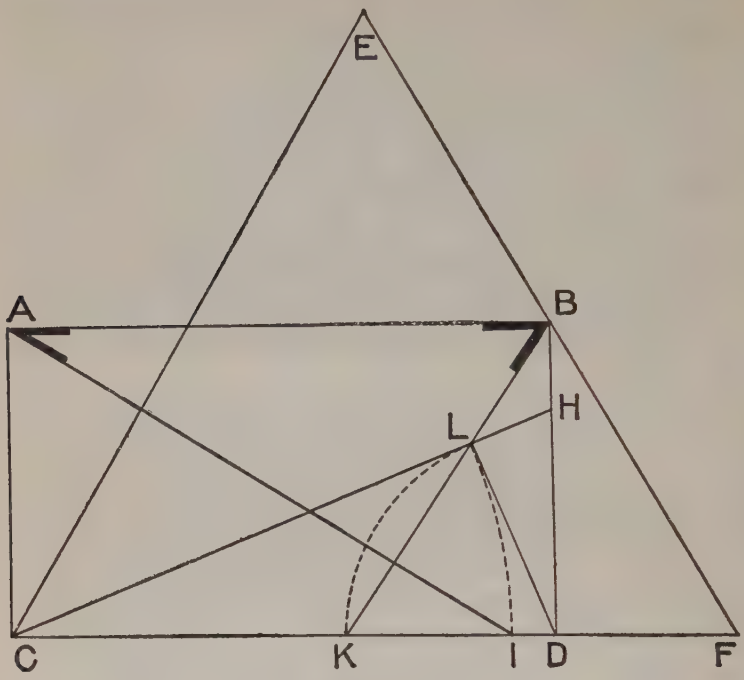

FIG. 69

To Find the Bevels Required to Miter Together the Flared Sides of a Hexagonal Hopper.—In Fig. 70, let NE be in the plane of the bottom of the hopper, and EJ the inclination of the sides; continue GD to B indefinitely; through J draw JO parallel to QD; through O draw AC at right angles to JO; make EM equal EJ; through M draw LC parallel to QD; make FH equal FJ; draw HA parallel to QD; through F draw FB

parallel to LC; connect CD, and the bevel at D will give the angle for the face joint; connect BA, and the bevel at B will give the angle for the miter on the square edge. This rule may be

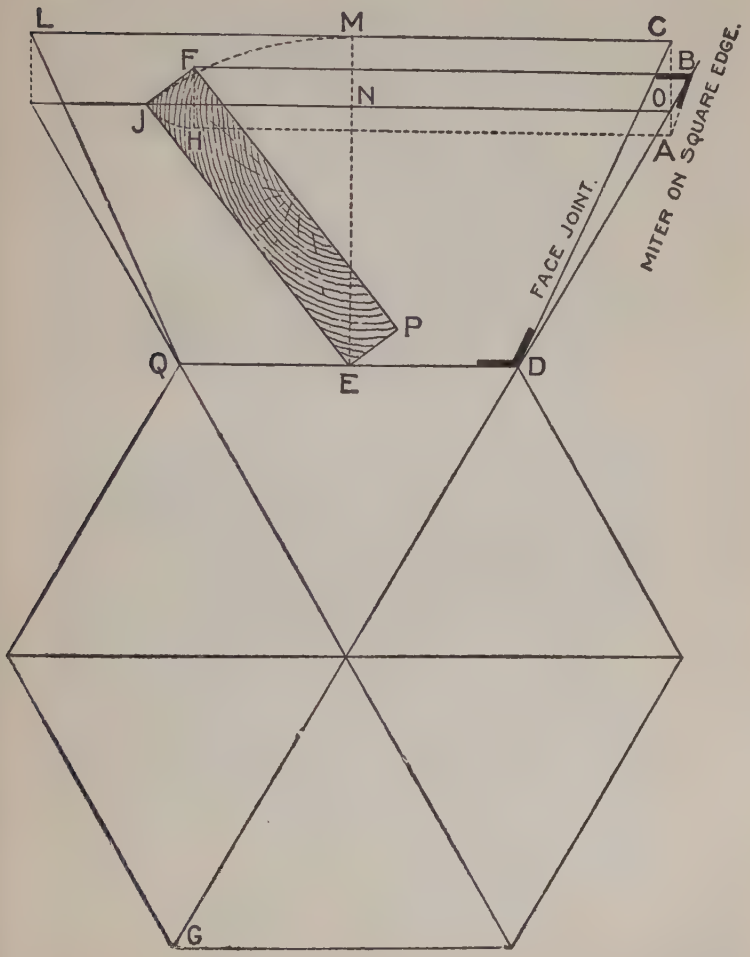

FIG. 70

applied to other figures, such as pentagons, octagons, or other similar hoppers, where the flares are equal.

Angles and Bevels for Hopper Work.—Sometimes the student may get in a little maze when working out the angles and bevels for hopper work, as the operation is often perplexing, and like the rules for stair-building, which will come a little later, requires patience and steadiness. There is no reason, however, because of these matters appearing difficult at first, that they should not be thoroughly understood by any ordinary workman, after two or three trials.

The following is from an article by Mr. A. W. Woods, published in a trade paper a short time ago:

Hopper Cuts are similar to the cuts required for fitting boards in or over a valley or hip roof; consequently the figures on the square that give the cuts for the roof boards must give the cut for a hopper of the same pitch.

Fig. 71 shows a hopper in different views, as follows: Beginning at the top is the top view of the hopper. As far as this part is concerned all hoppers are alike, as there is nothing in this to distinguish the pitch. Next is the sectional or side view. In this is shown the thickness of the boards and the flare or pitch, which in this is the three-quarters pitch. Next is shown the four sides in the collapsible or ready to be put together, followed with the top view of the edge of the board.

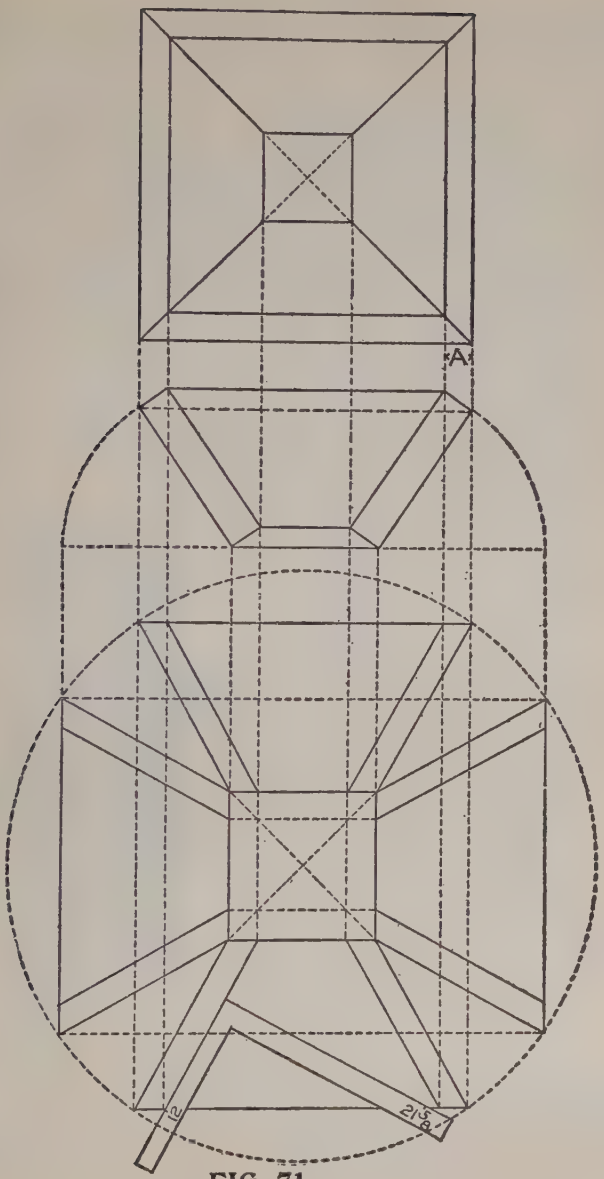

FIG. 71

Of course it is not necessary to lay out all of this diagram, or any of it for that matter; it is done by way of illustration. See the application of the square, which, in this case, is 12 and 21 and five-eights. But why use these numbers? Because the flare given is the three-quarters pitch or 12 and 18 on the square, and the hypothenuse of these numbers is 21 and five-eights, the tongue giving the side bevel. When working full scale it is always 12 on the tongue.

Miters.—For the miter bevel, the top edges should be first beveled so as to be level when in position. The miter would be at an angle

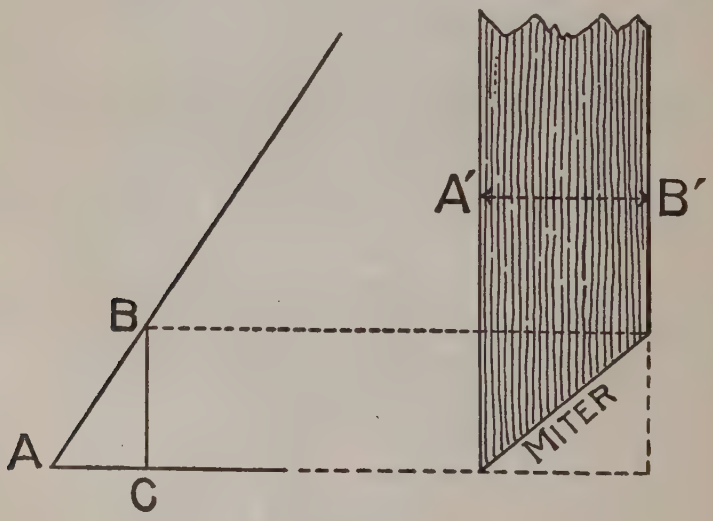

FIG. 72

of 45 degrees, and any of the equal numbers on the square gives this cut; but if the edges are to be left square with the sides, as shown, the above

will not work. To accomplish this, however, it may be obtained as shown in diagram at A, by setting off ½ the thickness along the edge of the board, or as shown in Fig. 72 as follows: Lay off the base and the desired pitch, and on the latter measure the thickness of the board as at AB. From B draw a plumb line to base. BC is the width apart; the side bevels should be along the edge of the board.

In case of large hoppers to be built to suit some particular place, or regardless of pitch, it

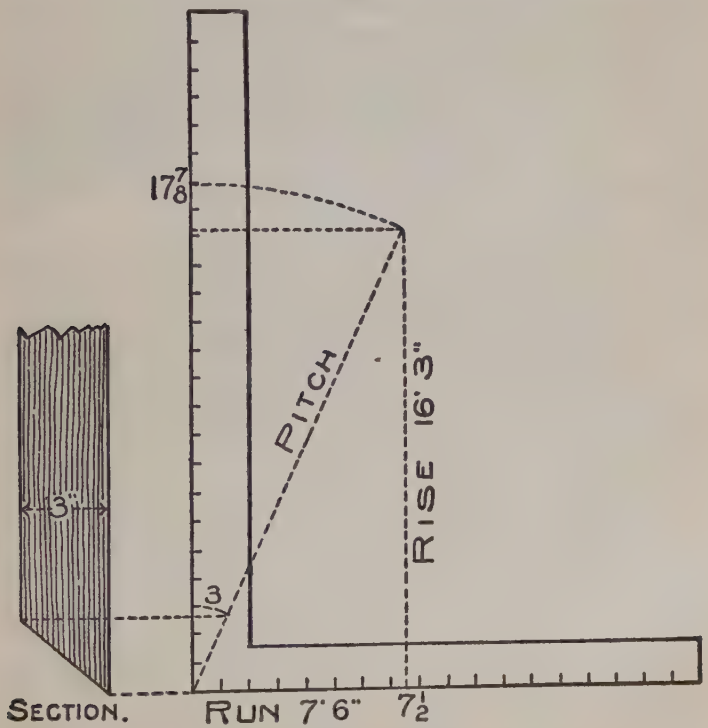

FIG. 73

is better to use the one-inch scale as illustrated in Fig. 73. For example, let 7 feet 6 inches be the run and 16 feet and 3 inches be the rise. Take $7\frac{1}{2}$ on the tongue and 17 and seven-eighths on the blade; the tongue gives the cut across the face of the board. Take 17 and seven-eighths on the tongue and 16 and three-twelfths on the blade and the tongue gives the cut across the edge of the board to form the miter, or it may be found by diagram as shown in the section.

Methods of Finding the Miter.—Great as the steel square may be in the hands of the learned mechanic, it is only secondary to the compasses. It simply steps in as an aid in defining what has already been determined by the compasses and their divisions called degrees. Therefore, we cannot pass the compasses by and the part they play without giving them due credit.

It will be our aim as far as possible to illustrate the part each instrument plays, thereby helping the student to more readily grasp the subject.

The old time masters, who set the recognized standard in architectural proportion, based their calculations upon the diameter of the circle and its divisions. Miters are governed by the divisions of the circumference of the circle, and not alone by the figures on the square. Therefore, to unlock the great fund of information contained in the arms of the square, it must be done by degrees. There are 360 contained in the circumference of the circle, and any of the regular polygonal miters can be readily found by dividing 360 by the num-

ber of sides in the polygon, and the quotient will be the angle that the miters stand with each other, but in order to obtain the angle with the steel square it is only necessary to take one-half of the degrees contained in the circle, or 180, and this divided by the number of sides in the polygon will give the degrees to use on the square. The reader will notice that we use 12 on the tongue for all miters; the reason we do this is because

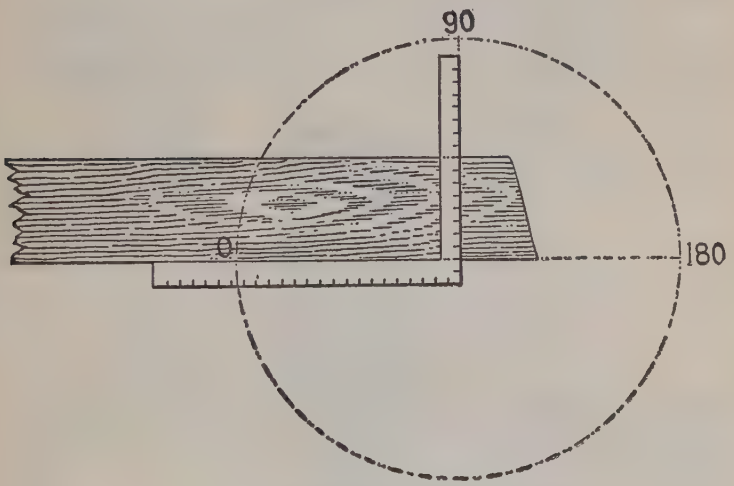

FIG. 73A

12 represents unity. It may represent one inch, one foot, one yard, or any other scale of measurement.

The casual observer sees nothing in the square beyond a simple measuring tool, or for squaring off the end of a board, which is the simplest of all the movements of the square. Yet as simple

as it is, it is governed by the degrees, as will be shown in referring to Fig. 73a.

In all cases a straight line, which may be the edge of a timber, represents one side of an angle from which the other side of the desired angle is reckoned, and in reality represents 180 degrees. Now, since the arms of the square set at an angle of 90 degrees with each other, just that much will it take from 180 degrees having the angle stand at 90 degrees as shown.

In Fig. 73b is shown the simplest of all miters, and it is used more than all others. The knowing

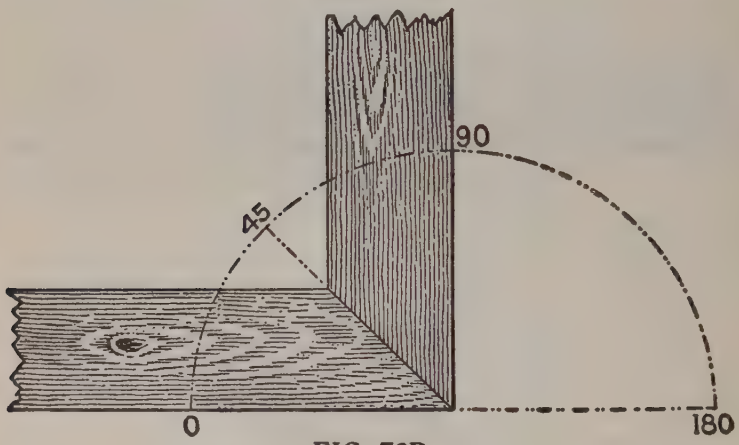

FIG. 73B

ones give the definition of the word miter as, "Joining two timbers at an angle of 45 degrees," without reference to any other angle. This is contrary to general belief and we see no reason why it does not apply equally as well to any other angle, and will treat them as such, but dividing

them into two classes, of regular and irregular miters. The former applies to polygonal corners, where the line of juncture is midway between

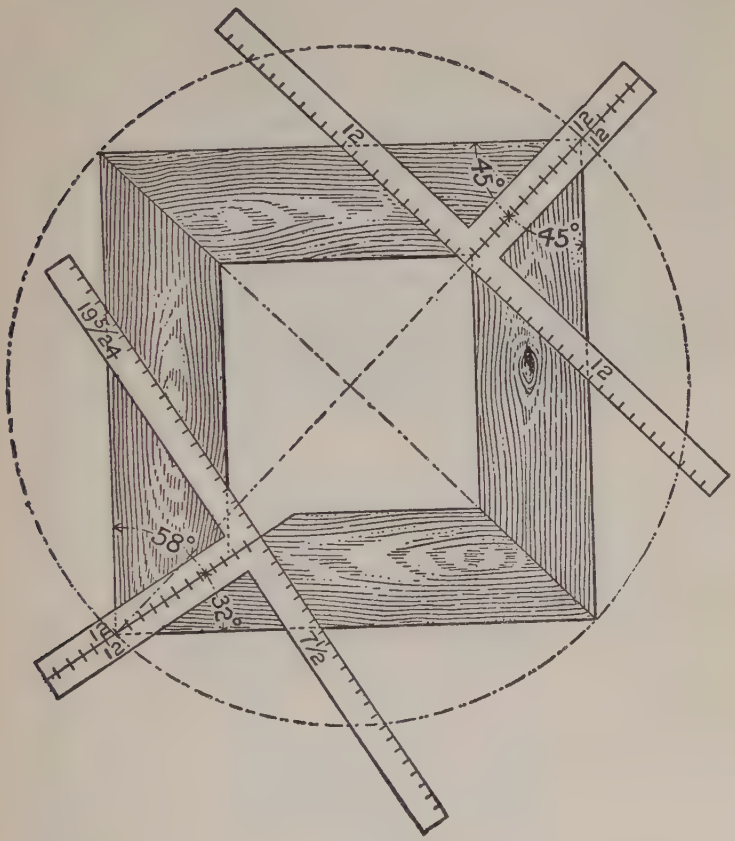

FIG. 73C

the outer edge of the timbers, as shown in Fig. 73b, and the latter to corners where the line of juncture does not rest midway between the outer

edge of the timbers, as shown in the lower left hand corner in Fig. 73c.

In this illustration we show both the regular and irregular miters for a square cornered frame, though it could be any polygonal corner. In this it will be seen that the regular miter is at 12 and 12 on the squares, and at 45 and 45 degrees from the edge of the timbers. In the irregular, the angle is at 58 and 32 degrees from the edge of the timbers, and on one of the squares it is at 12 and 19 5-24, and 12 and 7½ on the other, but either of the squares gives the same result as far as the miter is concerned.

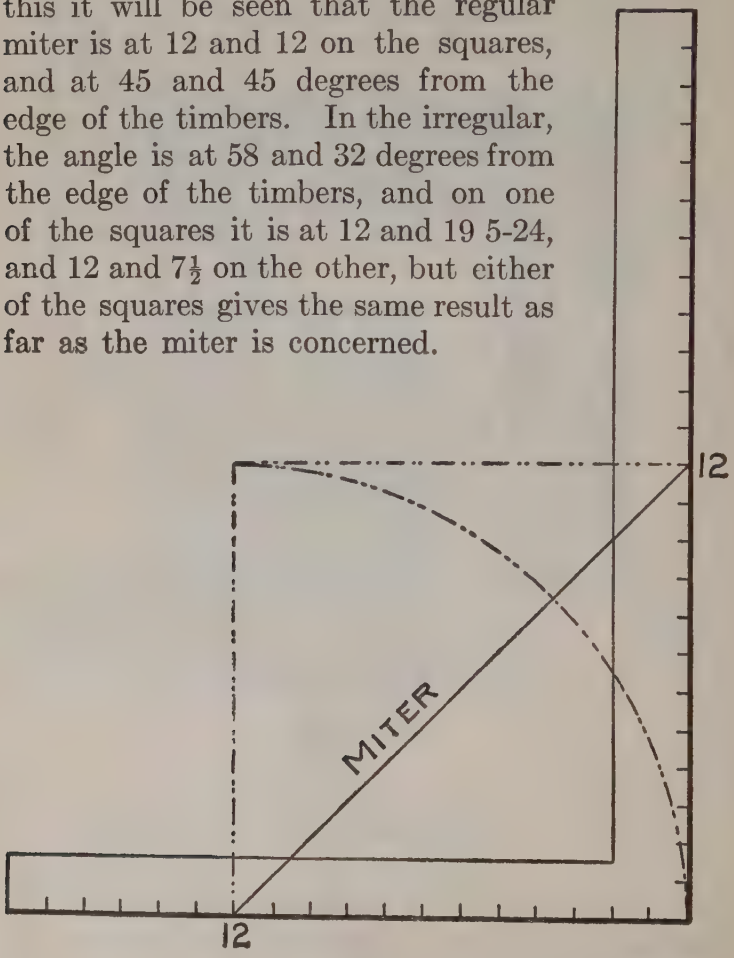

FIG. 74

The following is another article by Mr. Woods on bevels and hopper cuts generally, which owing to its excellency, we have thought worthy of

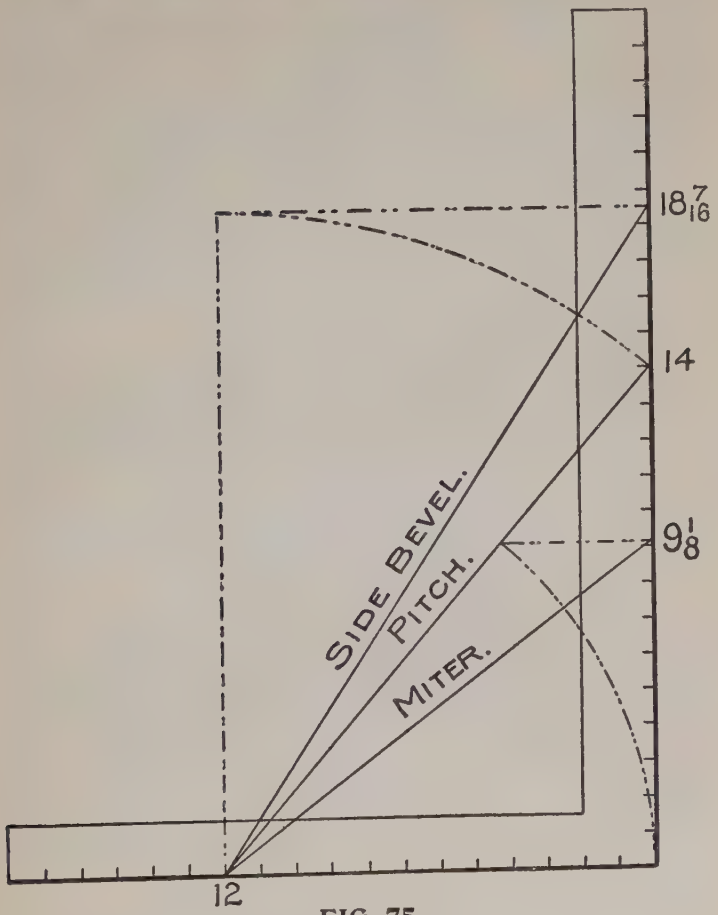

FIG. 75

a place in this work. The author starts out by saying: If there was no given pitch, then the sides would be vertical. Now with 12 on the

tongue as center, draw arc of same radius from the heel to a point directly above and square over the blade; 12 and 12 will give the miter, Fig. 74. Simple enough, but do you know that this simple rule applies when there is a pitch given? At the point where the arc intersects the pitch taken on the blade will give the miter, the blade giving the cut. See Fig. 75. For the side bevel across the board, transfer the length of the pitch to the blade, the tongue giving the cut. These figures also give the side cut of the jacks for a roof of same pitch. The blade in this case giving the cut.

Now we will give another method of finding the miter. In all roofs and hoppers there is an unseen pitch which we will call co-pitch. Assuming that the edges of our board are square the co-pitch would stand at an angle of 90 degrees with the given pitch. See Fig. 76.

The rule given in Fig. 75 for the side bevel will apply to the miter, but instead of using the length of the given pitch substitute that of the co-pitch, and by referring to Fig. 76 we find this to be $15\frac{3}{4}$ inches on the blade. Now for proof, see Fig. 77. Twelve and $9\frac{1}{8}$ first method, and 12 and $15\frac{3}{4}$ second method. The blade giving the cut in the former, and the tongue in the latter.

In Fig. 78 is shown all that is contained in the other figures, besides showing another pitch. It is an extension of the co-pitch to a point of the given pitch. This we will call complement

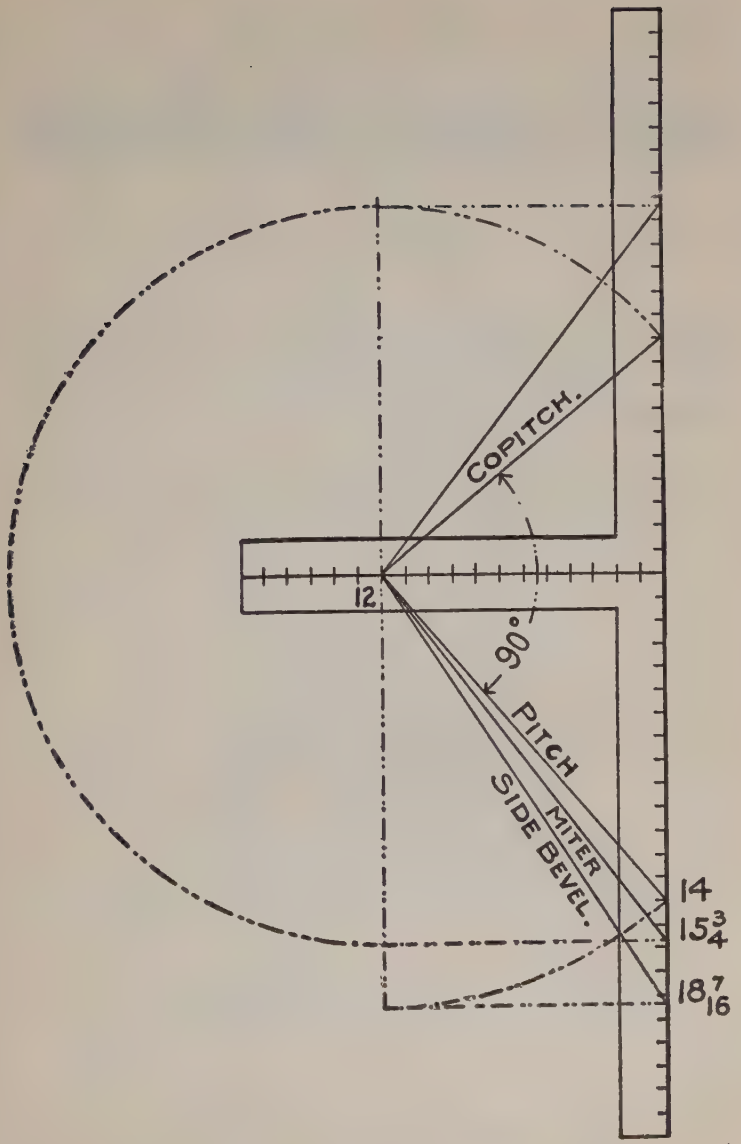

FIG. 76

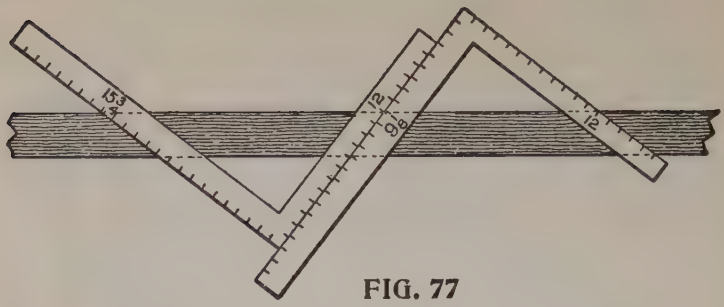

FIG. 77

pitch. The length of this pitch transferred to the blade will give the butt-joint or miter; the tongue giving the cut.

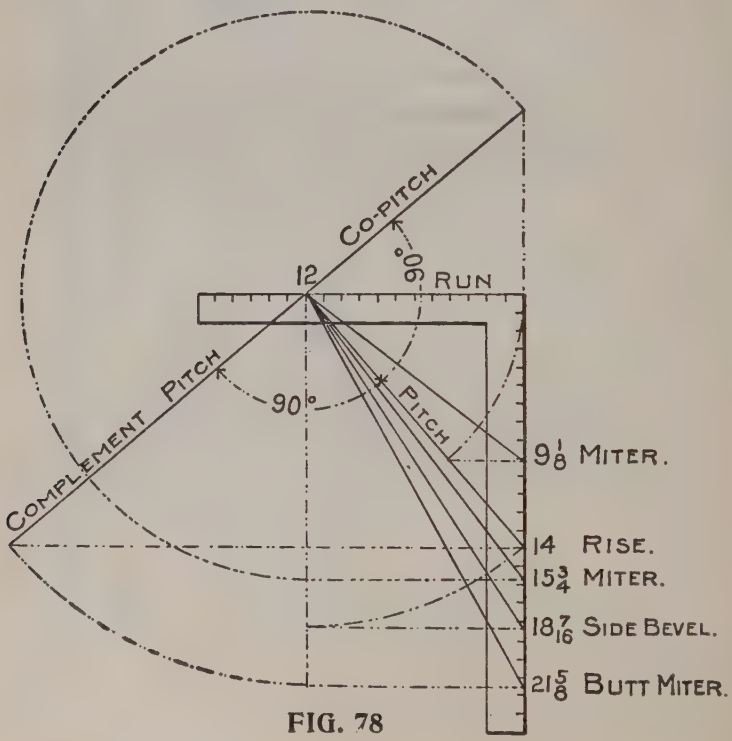

FIG. 78

In Fig. 79 is shown a diagram for a hopper of one-half pitch. In this all of the pitches are of equal length, therefore 12 and 16 and thirty-one-thirty-seconds will give all of the cuts; the

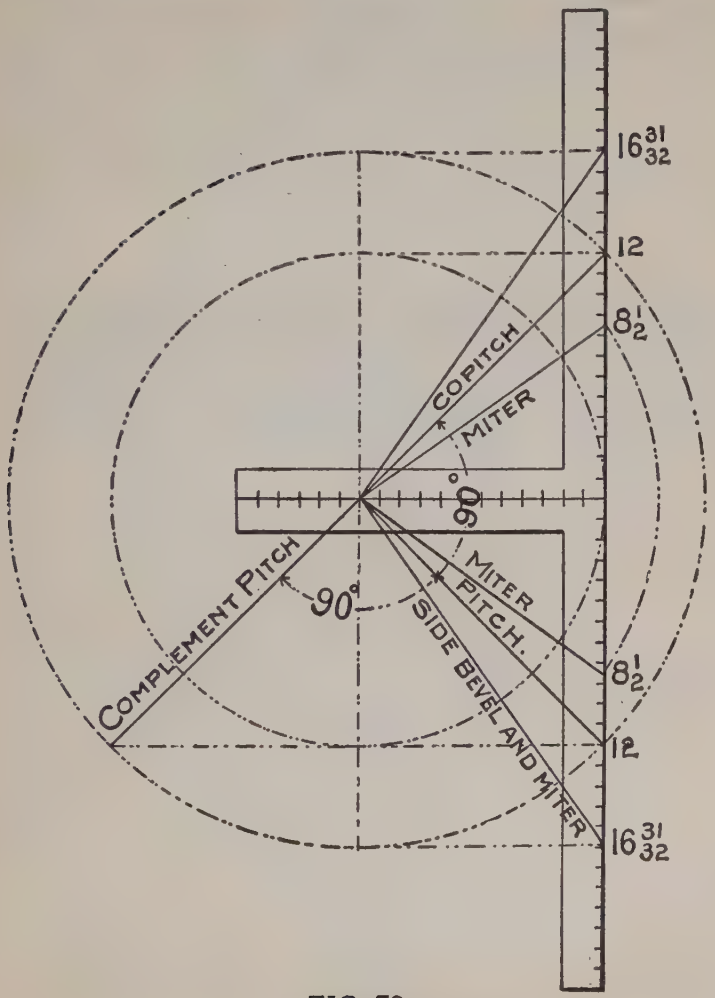

FIG. 79

tongue giving the cuts in each case. Fig. 80 and 81 are simply fillers and self-explanatory.

From the foregoing it will be seen that the standard of measurement is 12 on the tongue

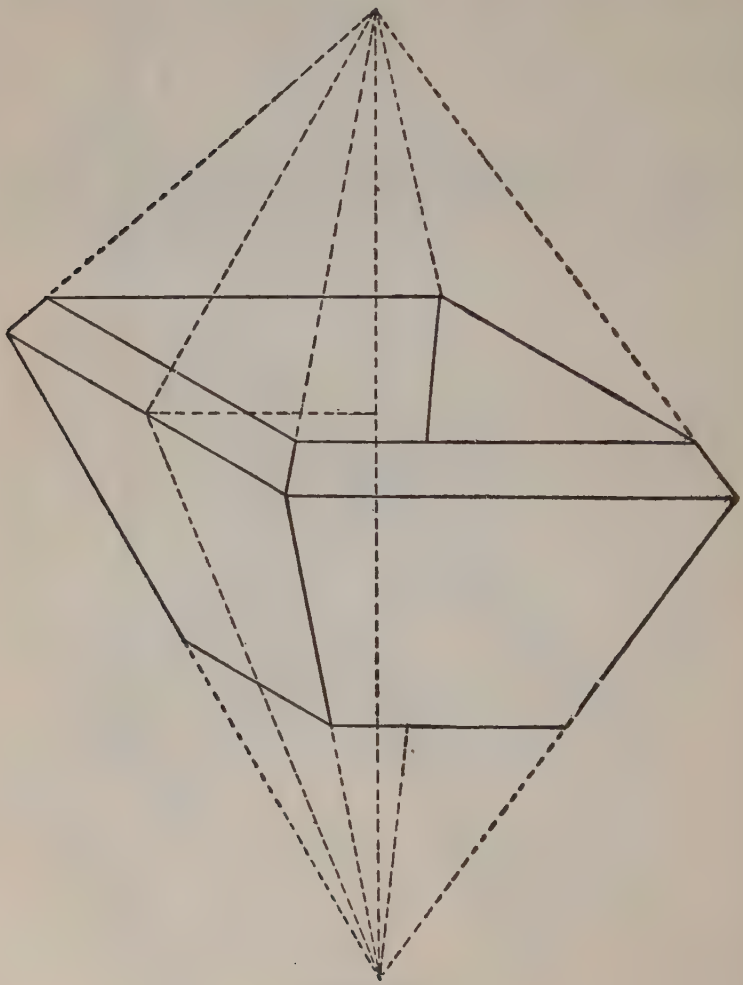

FIG. 80

of the square, and this applies to any run or flare given the hopper. The preceding illustrations apply only to the square cornered hopper, but the rule therein used applies to any regular polygonal hopper. For example we will take the pentagon or five sided hopper, and in this we will show two methods of obtaining the miter bevel.

First method is shown in Fig. 82. We wish to make a hopper two-thirds pitch or 16-inch

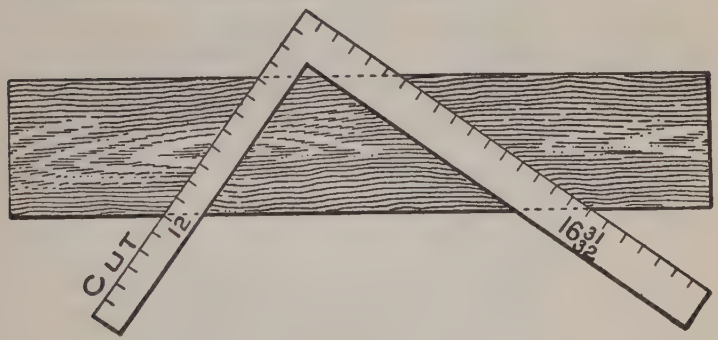

FIG. 81

rise to the foot in run; 12 and 16 give the hypothenuse or pitch and is 20 inches in length. Next we take 8 and 17-24 on the blade because that is the tangent for the pentagon just the same as 12 is for the square figure. Then with 8 and 17-24 for radius describe an arc from 12 cutting the pitch line as shown; thence carry this point to the blade as at A; 12 on the tongue and A on the blade will give the miter across the edge of the board; the latter giving the cut. 8 and 17-24

transferred from the blade to the tongue and 26 on the blade will give the cut across the face of the board.

In Fig. 83 is shown the second method: In this it will be seen that the same figures are used as in the first method for finding the miter cut.

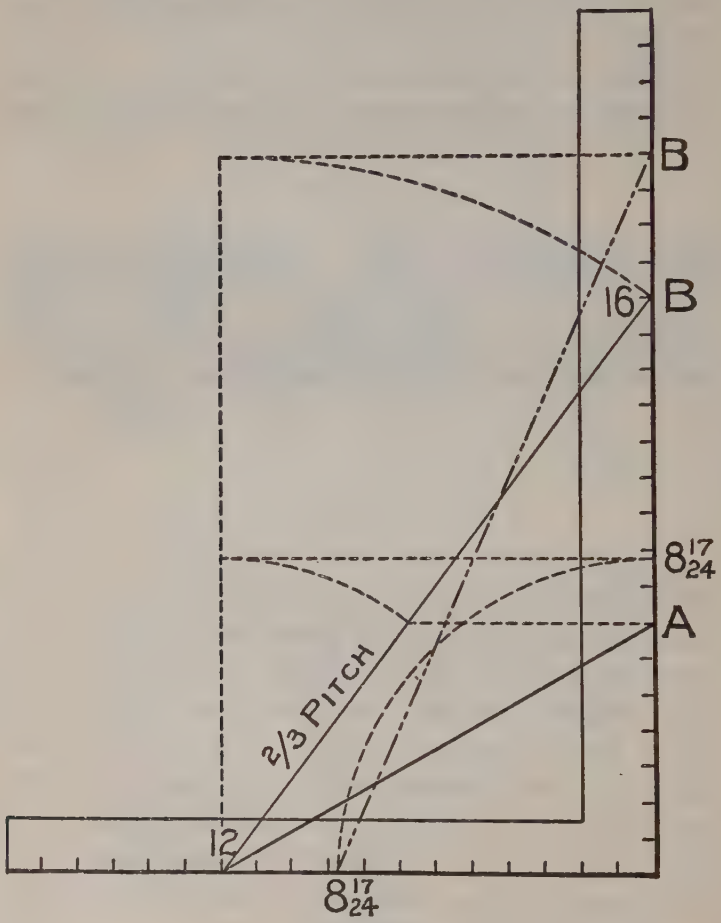

FIG. 82

In this illustration we show two squares with their tongues together. The side cut is found the same as in the former figure, but in this another pitch is shown and which we will call the co-pitch. This pitch stands at 90 degrees from the given pitch of the hopper, provided the timber is square edged or at right angles with the side (though it may be at any angle). The rule is: Take the length of the co-pitch on the blade and 8 and 17-24 on the tongue and the latter will give the miter. This rule applies to any polygonal hopper. The figures to use on the tongue are always 12 and those that give the miter for a polygonal frame.

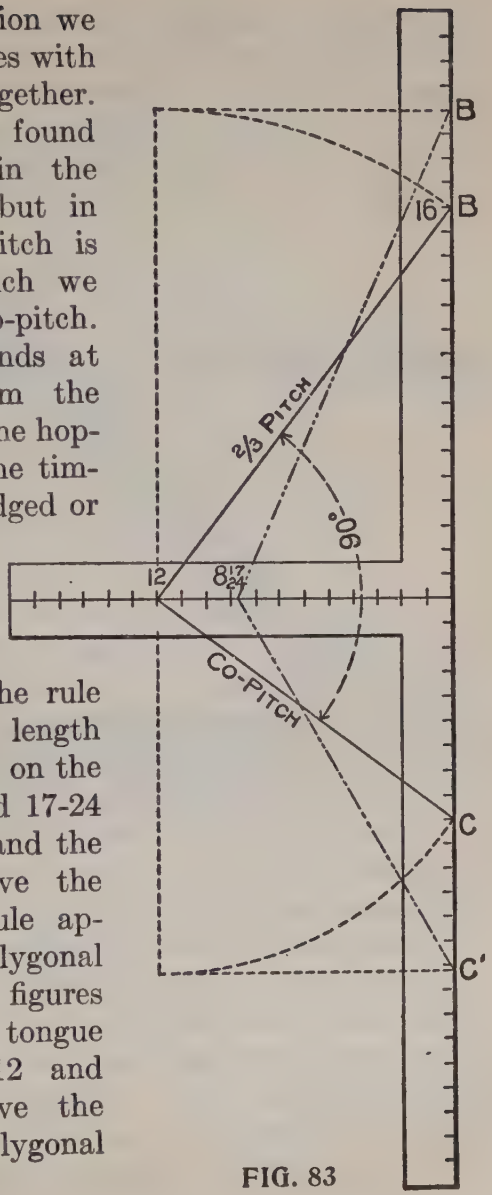

FIG. 83

In the case of a square hopper the tangent is equal the run (12) and for that reason only one set of figures on the tongue is used.

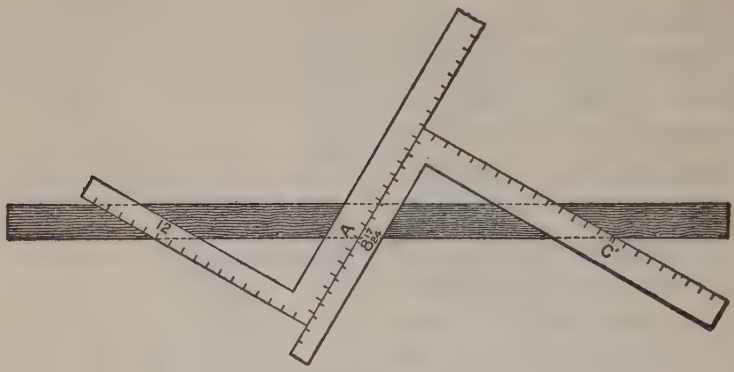

FIG. 84

In Fig. 84 is shown a proof of the two methods. The blade giving the cut in the former and the tongue in the latter.

Trusses.—In taking up the subject of trusses it is not our intention to enter into the subject further than the application of the Steel Square in obtaining the cuts and bevels. The rules for finding the cuts and bevels for common rafters and braces will apply to truss work in general.

In Fig. 85, A is the straining beam, B the brace, T the tie beam. Generally the brace has about one-third the length of tie beam for a run. From the rise and run find the length and lower end bevel of the brace. After marking the lower end bevel on the stick, add to it just what is cut out of the tie beam. The bevel of the upper end

of the brace where it butts against the straining beam is found in the following manner: Take the length of the brace, or a proportional part, and mark it on the edge of a board; take half the rise of the brace on the tongue, lay it to one of these marks on the board, and move the blade

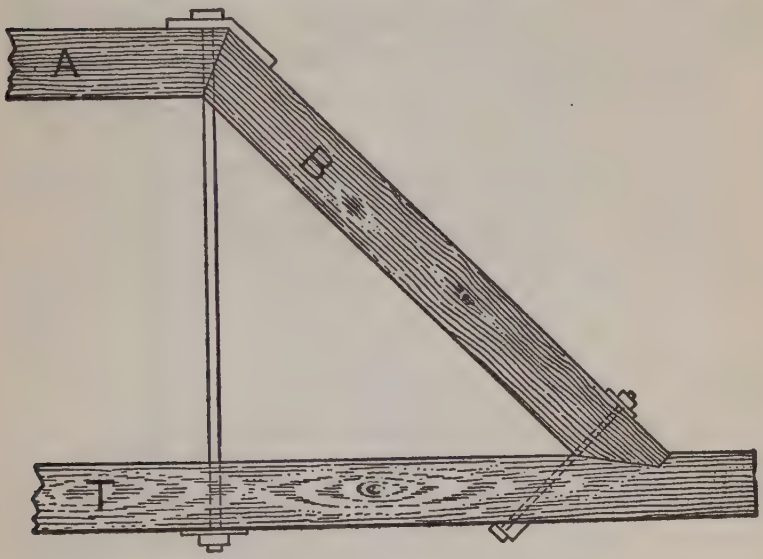

FIG. 85

until it touches the other mark on the board. A line drawn along the tongue gives the bevel for both brace and straining beam. The angle made between brace and straining beam is thus bisected: Lay off the measurements from the outsides of the timbers. Put a bolt where shown, with a washer under the head to fit the angle of straining beam and brace.

Fig. 86 represents the cross braces between the straining and tie beams. If the braces butt together as shown in the upper left hand corner of figure, the length and cuts are simply those for a common rafter having the same run and

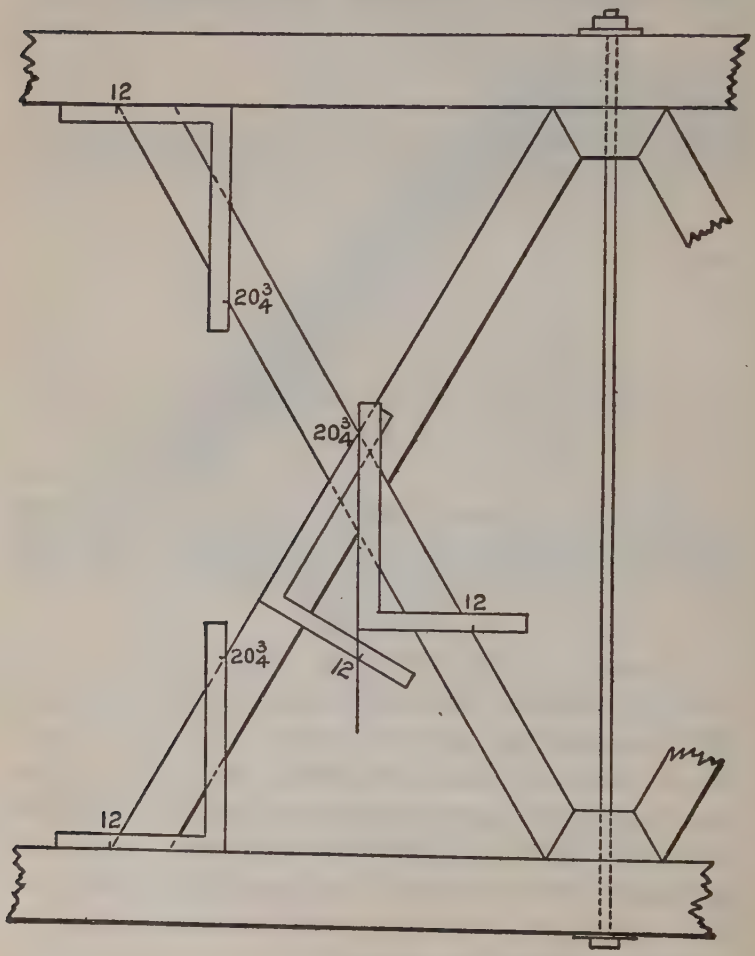

FIG. 86

rise. Usually a block of hard wood is used for the ends of the braces to rest against, as shown at the upper right hand corner, and in that case the angle may be found as for the brace against the beam.

These braces are sometimes halved at the center to allow the sides of the braces to be flush with each other. The angle of cut is found by applying the square with the figures that give the plumb cut of a rafter of same pitch; and to this without change of figures apply a second square as shown; this will give the proper angle across the brace from which to remove the wood.

Tower for Windmill, etc.—In connection with trusses we show in Fig. 87 a tower suitable for a windmill or for other similar purposes. The posts incline two inches to the foot—that is, two inches from the plumb line to every foot in the length of the post, and this incline is both ways. The length of post and bevels at the foot and top of posts may be found by applying the square as shown at R—that is, 24 inches on the blade and 4 inches on the tongue or 2 inches on the tongue and 12 inches on the blade, which is the same thing, so far as the bevels are concerned. These same figures also answer for the ends of the joists, S-S. We show in Fig. 88 the manner in which the bevels at the foot of the posts are marked. The dotted lines show the bevels on all sides, for, as the post leans two ways, the post must be beveled two ways. This, of course, will present itself to the workman as

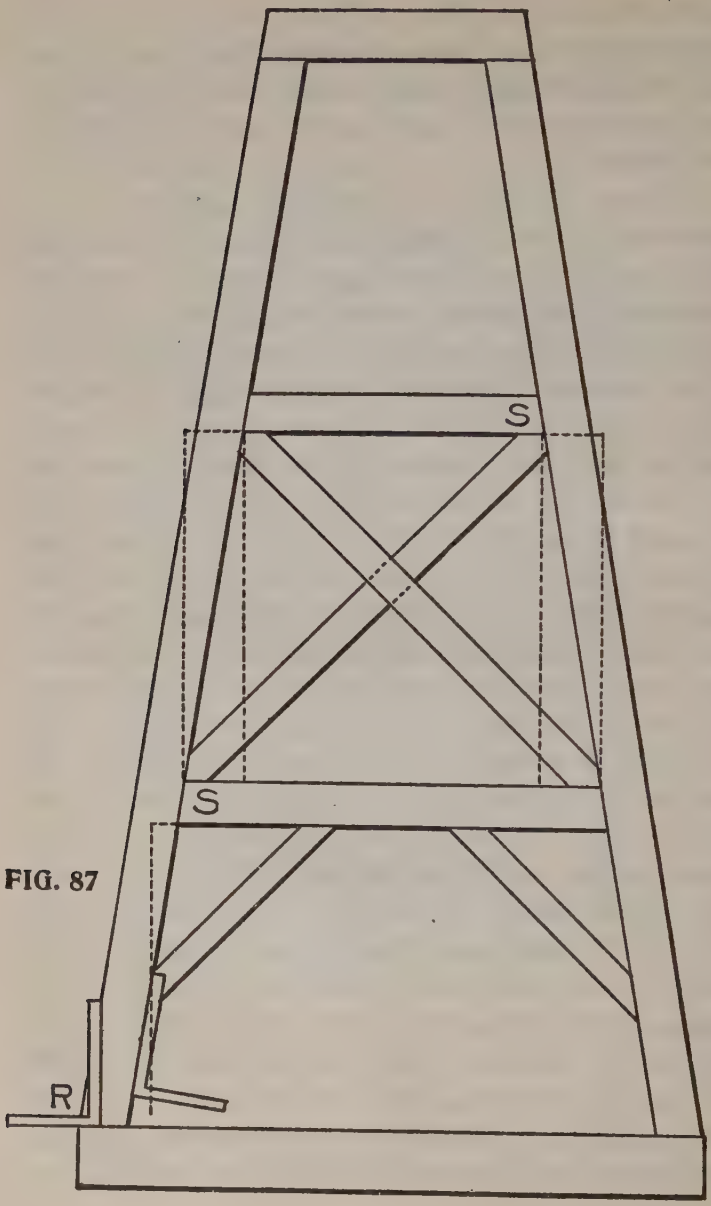

FIG. 87

he proceeds. Let us suppose the foot of the post to have no tenon, but it is intended to rest flat-footed on the sills. This being the case, it gives us an opportunity of getting the backing of the post, for, like a hip rafter—which it is—it requires to be backed, if it is intended to be enclosed or boarded, and we will suppose it is so intended. From an examination of Fig. 89 we can see how

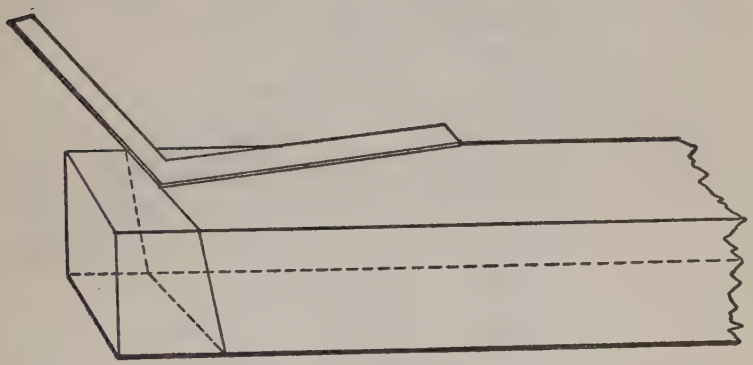

FIG. 88

the backing of the post may be obtained by using the square and applying it on the foot after it has been cut. The overwood at E is to be removed. In order to make the ends of the braces and cross pieces cut square against the corner posts, the latter should also be backed on the inside angle as well as on the outside, otherwise there would be little angle across the top of these braces to contend with, not much it is true, but enough to leave an open joint unless these pieces are cut to the angle. It will be noticed that the square is placed on the angles O and P, with

its heel at E. The distance from E to P is the same as from E to O. The overwood shown in this is somewhat exaggerated purposely, to give a clear idea of the requirements. The braces shown in this sketch will give the student an opportunity to figure. The lengths and bevels

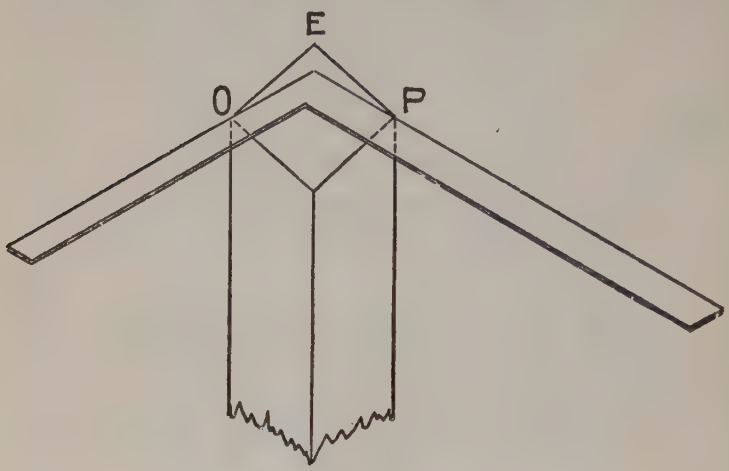

FIG. 89

may be obtained either by using the square or by taking them from a drawing, or by calculation.

We may observe at this point, that the posts in this structure are simply like the hips in a very steep roof or spire, and in a measure may be treated as such, but it will be seen that while the posts rest in the same position as the hip in the roof, its sides do not rest parallel with the plate as they do in the case of the tower.

Part VII

STAIR BUILDING

How to Determine the Height and Run—Illustrations of the Pitch-Board—Open Strings—Risers and Treads—Housed or Closed Stairs—Other Methods of Making a Stair String—Connecting and Affixing Strings—Balusters—Brackets—Finish of Wall String at Foot of Stairs—Finish of Wall String at Top of Stairs—Open String at Foot of Stairs

Although an entire volume can be devoted to the structure and kinds of stairs we will only dwell upon them so far as the Steel Square is concerned in obtaining the run and rise.

How to Determine the Height and Run.—In laying out stairs with the square, it is necessary to first determine the height from the top of the floor from which the stairs start, to the floor on which they are to land; also the run or distance of their horizontal stretch. This is found by dividing the height into the number of rises desired in the stairway. This usually results in fractions of an inch to each rise and somewhat complicates the work. However, the fractions may be avoided by the use of the story pole by spacing it off with a pair of compasses into the number of risers desired in the stairs. This being done the rest is comparatively easy, because the run or horizontal stretch is not usually limited as to exact space as in the case of the rise of the

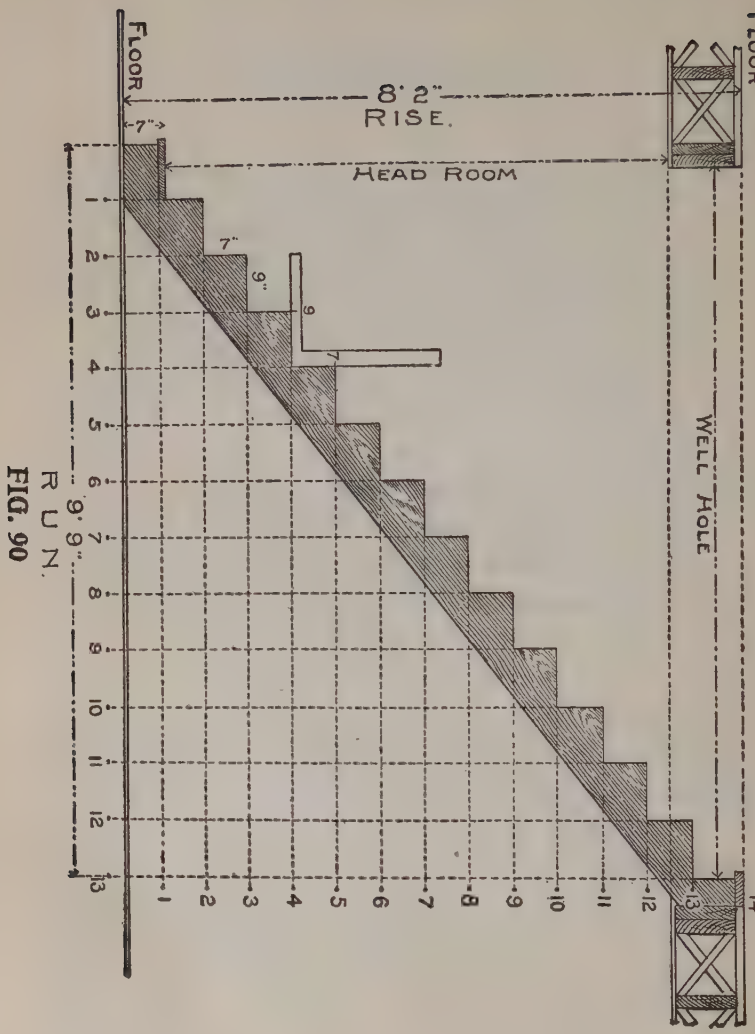
FLOOR
8' 2"
RISE.
HEAD ROOM
WELL HOLE
FLOOR
7"
7"
9"
9
7
9' 9"
RUN.
1
2
3
4
5
6
7
8
9
10
11
12
13
14

FIG. 90

stairs, and as there is always one less tread than there are risers its length is determined by the width given the treads. Thus if there are 14 risers in the stairs there would be 13 treads. If the treads be 9 inches wide the run would be 9 times 13 or 117 inches, which is 9 feet and 9 inches as shown in Fig. 90. From this it will be seen that the run and rise of the individual step is taken on the Steel Square as shown in the illustration, and determines the shape of the pitch-board.

The way to make a pitchboard is by the use of a steel square, which, of course, every carpenter

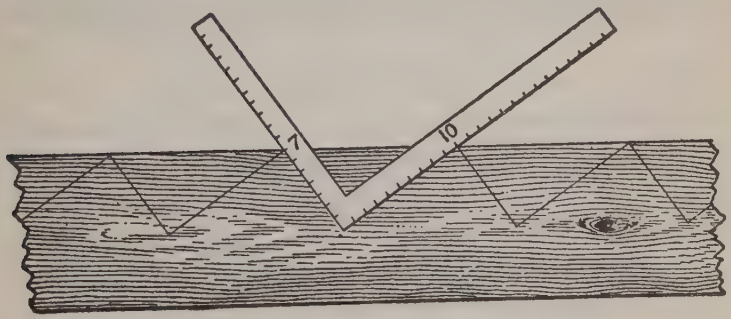

FIG. 91

in this country is supposed to possess. Fig. 91 shows a part of a stair string with the square laid on, showing its application in cutting out a pitch-board. As the square is placed it shows 10 inches for the tread and 7 inches for the rise.

To cut a pitch-board, after the tread and rise have been determined, proceed as follows: Take

a piece of thin, clear stuff, and lay the square on the face edge, as shown in the figure, and mark out the pitch-board with a sharp knife; then cut out with a fine saw and dress to knife marks, nail a piece on the largest edge of the pitch-board for a fence, and it is ready for use.

Illustrations of the Pitch-board.—The next thing to be considered is what is the manner of

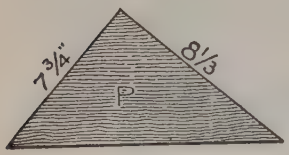

FIG. 92

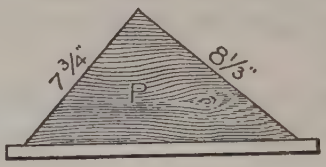

FIG. 93

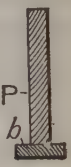

FIG. 94

using the pitch-board? Before showing its use, however, we wish the learner to have a thorough conception of what the pitch-board is, and with that object we show and explain the following illustrations. Fig. 92 shows the pitch-board pure and simple; it may be an inch thick, or if of hard wood, may be from a quarter to a half an inch thick.

Fig. 93 shows the pitch-board after the gauge or fence is nailed on. This fence or gauge may be about one and one-half inches wide, and from $\frac{3}{8}$ to $\frac{3}{4}$ of an inch thick. Fig. 94 shows a sectional view of the pitch-board with the fence nailed on as at bp, which shows the edge of the board.

Manner of Using the Board.—Fig. 95 shows the manner of applying the board. R,R,R,R, is

the string, and the line A shows the jointed or straight edge of the string. The pitch-board, p, is shown in position, the line $8\frac{1}{3}$ represents the step or tread, and the line $7\frac{3}{4}$ shows the line of the riser. These two lines are of course at right angles, or as the carpenter would say, "they are square." This string shows five complete cuts for treads, and six complete cuts for risers. The bottom of the string at W is cut off at the line of the floor on which it is supposed to

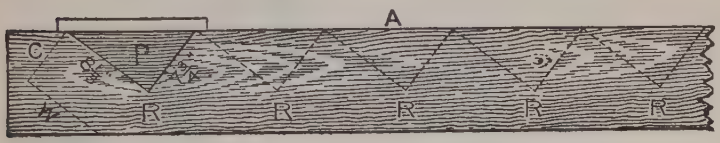

FIG. 95

rest. The line C is the line of the first riser. This riser is narrower than any of the other risers, because the thickness of the first tread is always taken off it; thus, if the tread is $1\frac{1}{2}$ inches thick, the riser in this case would only require to be $6\frac{1}{4}$ inches wide, as $6\frac{1}{4}$ and $1\frac{1}{2}$ inches together make $7\frac{3}{4}$ inches. Another thing to be considered is the string, which must be cut so that the line at W will be only $6\frac{1}{4}$ inches from the line at $8\frac{1}{3}$, and it must be parallel with it. The first riser and tread having been satisfactorily dealt with, the rest may be easily marked off by simply sliding the pitch-board along the line A until the line $8\frac{1}{3}$ on the pitch-board strikes the line $7\frac{3}{4}$ on the

string, when another tread and another riser are marked off in the same manner.

Open Strings.—Fig. 96 shows a portion of the stairs in position. S, S, shows the strings, which in this case are cut square; that is, the part of the string to which the riser is joined is cut square across, and the "butt" or end wood of the riser is seen. In this case, also, the end of the tread is cut square off and flush with the string and riser. Both strings in this instance are open strings.

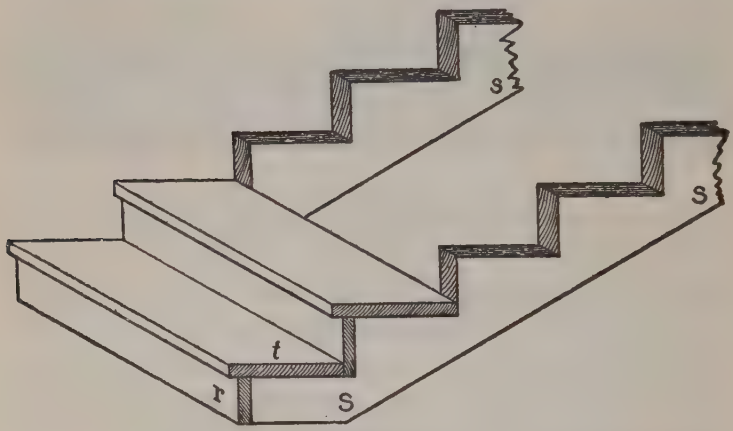

FIG. 96

Usually in stairs of this kind, the ends of the treads are rounded off similar to the front of the tread, and the ends project over the strings the same distance that the front edge projects over the riser. If a moulding or "cove" is used under the nosing in front, it should be carried round on the string to the back edge of the tread, and cut off square, for in this case the back edge of the

tread will be square. The riser is shown at R, and it will be noticed that it runs down behind the tread on the back edge, and is either nailed or screwed to the tread.

Risers and Treads.—Fig. 97 shows the customary way of putting risers and treads together.

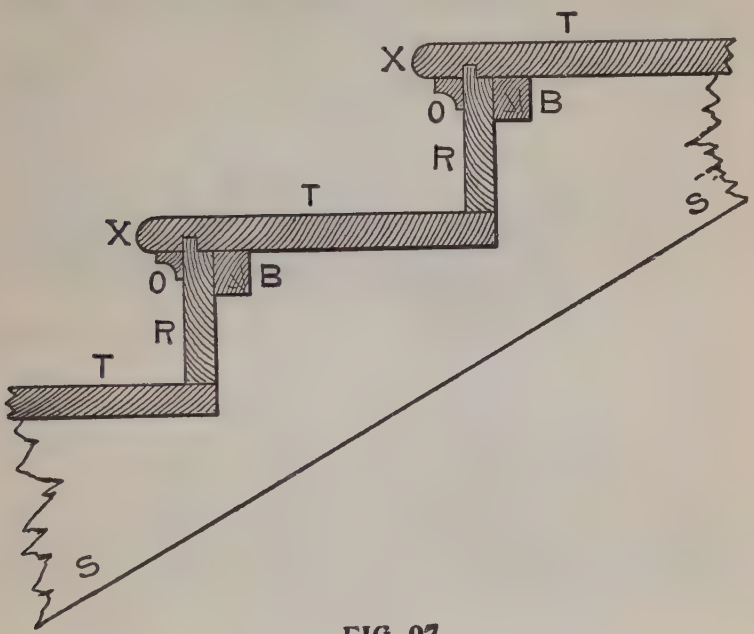

FIG. 97

T, T shows the treads, R, R the risers, S, S the string; O, O the cove moulding under the nosing X, X. B, B shows the blocks that hold the tread and risers together. These blocks should be from four to six inches long, and made of very dry wood. Their section may be from one to two inches square. On a tread three feet long,

three of these blocks should be used at about equal distances apart, putting the two outside ones about six inches from the strings. They are glued in the angle.

It will be noticed that the riser has a lip on the upper edge, which enters into a groove in the tread. This lip is generally about $\frac{3}{8}$ inches

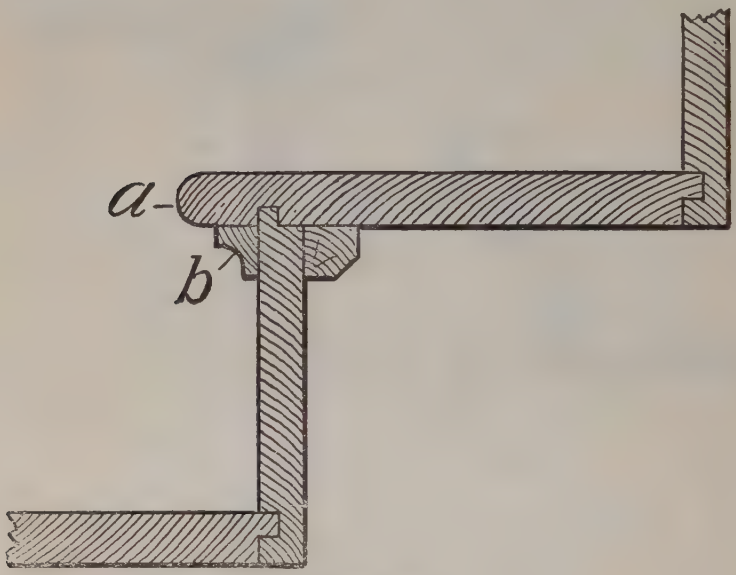

FIG. 98

long, and may be $\frac{3}{8}$ or $\frac{1}{2}$ of an inch in thickness. Care must be taken in getting out the risers, that they are not made too narrow, as allowance must be made for the lip. If the riser is a little too wide it will do no harm, as the overwidth may hang down below the tread; but it must be made the exact width where it rests on the string.

The treads must be made the exact width required before they are grooved or the nosing worked on the outer edge. The lip or tongue on the riser should fit snug in the groove and bottom. By following these last instructions, and seeing that the blocks are well glued in, a good solid job will be the result.

In Fig. 98 a scheme for the construction of the tread and riser is shown. The tread has a lip worked on it at the back edge, which enters a groove ploughed in the riser. The riser also has a lip left on the upper edge, which goes into a groove made in the tread similar to the method shown in Fig. 97.

The cove is shown at b, and the angle block is also represented. This makes a very solid step when well put together, and, where the steps are to be of the better kind, this method of constructing the step may be adopted with advantage. This method is a favorite one with stair builders, and has proved to be a substantial one, though it costs a little more than the ordinary method.

Housed or Closed Strings.—Fig. 99 represents a housed or closed string. In this the risers and treads are let into the strings from the back side.

Gauge lightly a line from the upper edge of the string, the distance intended to stand above the treads as shown in the dotted line. On this line apply the pitch-board, as explained on previous pages. In laying out housed strings, it is as well to take the fence off the pitch-board, as it can be handled better without it, as the long

side will have to be kept close to the gauge line, to insure good work. The top lines for treads and the face lines for risers, are the lines that define the step, and cannot be changed; but the back line of the riser and the lower line of the tread should be made to run so that the housing or

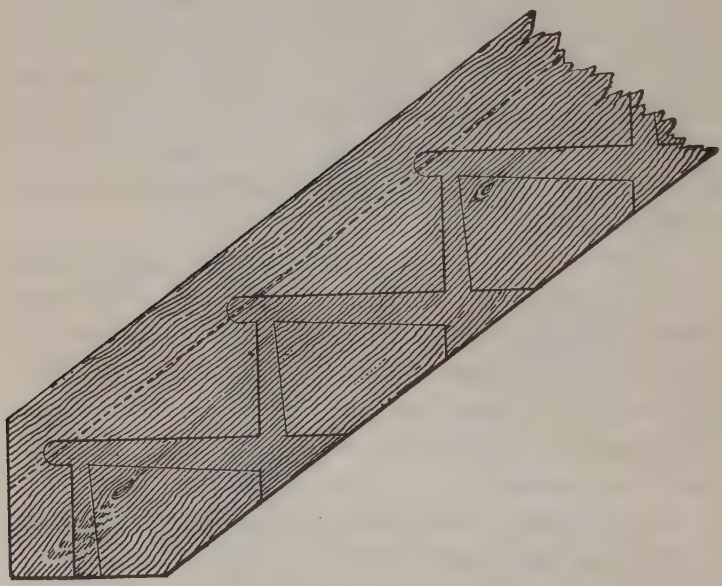

FIG. 99

groove will be wider at the under side of the string than at the junction of the riser and tread at the nosing, where the grooves will be the same width as the riser and tread are in thickness separately. The nosing projects over the riser, as will be seen, and to mark this portion out, it is usual to make

a template or pattern for the purpose. Indeed, it is best to make a template to lay out the whole housing of the tread, and in shape as the shaded part shown in the illustration.

The reason the grooves are left wider at the back edge of tread is so that a wedge can be driven between the tread and the lower edge of the groove,

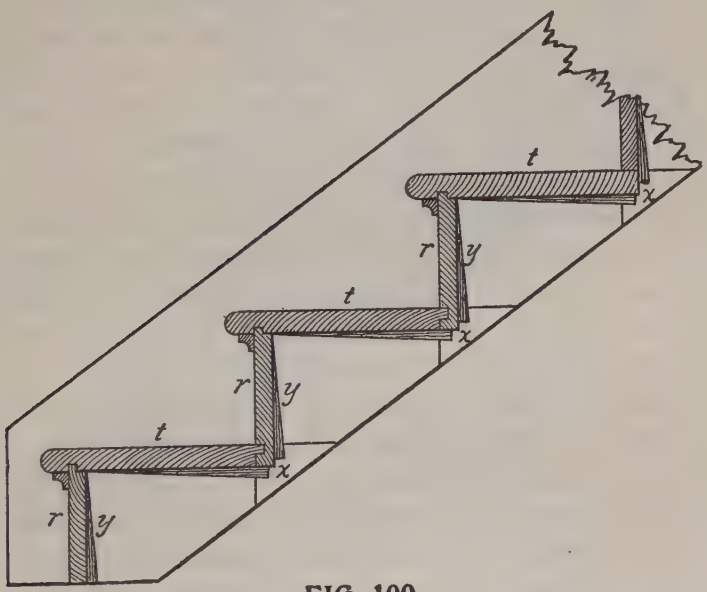

FIG. 100

to force the top side of the tread close to the upper edge of the groove, thus making a tight joint and insuring strength and rigidity to the whole structure. The risers are also wedged into place, as is shown in Fig. 100. After the treads and risers are laid out on the string, a sharp pointed knife blade should be used to mark the lines for the

face of the riser and top of the tread, then a fine tenon saw should be used to saw down to the exact depth. This will not be difficult to perform when the hole forming the nosing recess has been bored to the proper depth. A gauge line should be made on the back edge of the string to indicate the depth of the housing. Care should be taken in removing the wood from the grooves, that too much is not taken or the grooves made too deep. A gauge for trying the depth may be made out of a piece of hard wood, say about four inches long and three inches wide, by about one-half inch in thickness. Make a tenon on the center of one end, about three-quarters of an inch in width, and cut the shoulders back sufficiently to admit the tenon being long enough to touch the bottom of the groove or housing, when the shoulders rest on the face of the string.

In Fig. 100 we show a sectional elevation through the steps. The treads, t, t, and the risers, r, r, are shown in position. These are secured, as will be seen, by means of the wedges, x, x, and y, y, which are well covered with glue before they are inserted and driven home. Stairs made after this manner are strong and perfectly solid under foot.

Other Methods of Making a Stair String.—We have now shown you the way to make an open string and how to make a housed string. There are several other methods of making a stair string than those shown already; one way is to form two tenons on the end of the tread, which fit

into mortises cut through the string. This method makes a very strong stair if the string is wide enough to allow for the loss of strength caused by making the mortises.

In Fig. 101 several ways of forming an open string are shown. Different methods of uniting the risers and treads are shown. They may be

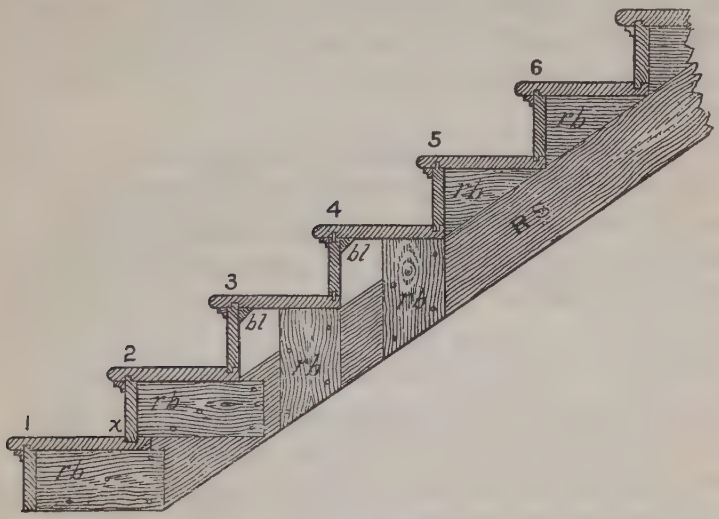

FIG. 101

grooved and tongued, as in steps 5 and 6, or feathered as in step 4, or rabbeted as as step 3; in every case the joint should be glued and blocked. Sometimes the riser is housed into the tread as at X. The tread is also sometimes tongued into the riser, but this is not good construction, and should be avoided. R, S, show a rough string or scantling, having pieces, r, b, steps 2, 3 and 4, nailed or screwed onto it to support the treads.

Triangular pieces may be nailed on the top edge of the scantling to support the treads, as shown at steps 5 and 6. A rough string, corresponding to the open string, may be used in place of any of the foregoing methods. The under edge of all rough strings should be made to coincide with the lower edge of the furring or cleat, nailed on the inside lower edge of the outside cut string, and so arranged that the lathing will nail on the furring, the rough strings, and the lower edge of the wall string.

Connecting and Affixing Strings.—We have now described several methods of dealing with strings, but there still are several other things connected with strings, both housed and open, that will be necessary to explain before one can proceed to put up a fair flight of stairs. The connection of the wall string to the base of the lower and upper floors, and the manner of affixing the outer or cut string to the upper joist and to the newel are matters that must not be overlooked, and we intend to show how these things are accomplished. We will proceed now to describe the method of finishing the tread and riser at the end of the step that rests on the outer string.

Fig. 102 gives two views of a portion of a better-class stair, a stair with cut and mitered string, or open string stair. In referring to the plan W S, shows the wall string; RS the rough string placed there to give the structure strength; and OS the outer or cut string. At a, a the ends of the risers are shown, and it will be noticed that

they are mitered against the vertical or riser line of the string, thus preventing the end wood of the riser from being seen. The other end of the riser is in the housing in the wall string. The

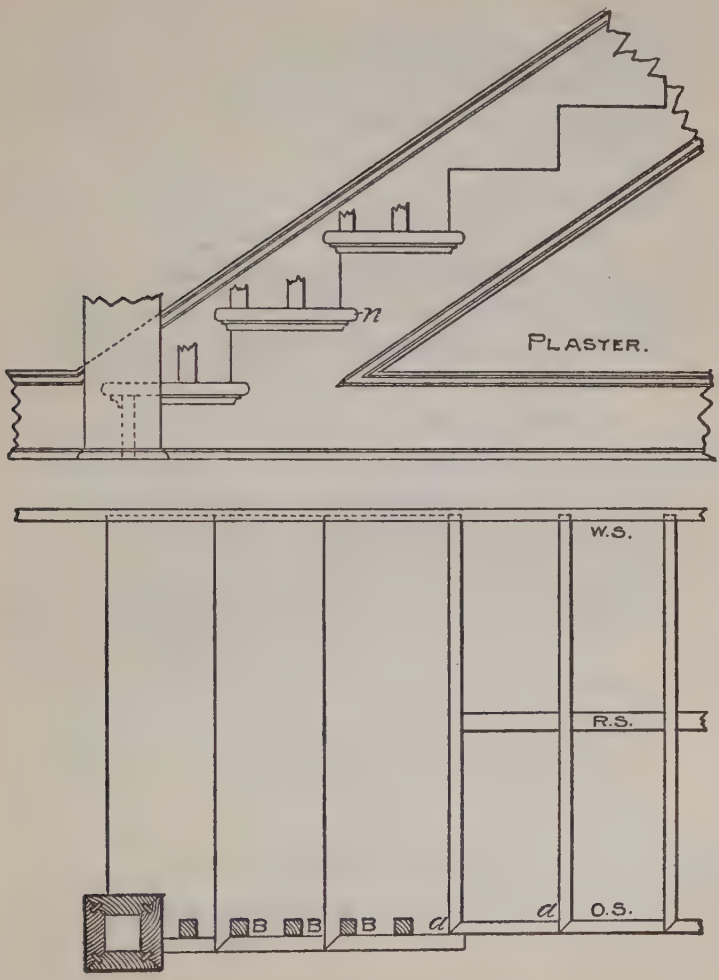

FIG. 102

outer end of the tread is also mitered at the nosing, and a piece of stuff made or worked like the nosing is mitered against, or returned at the end of the tread. The end of this returned piece is again returned on itself back to the string, as shown in the upper portion of the cut at n. The moulding, which is a five-eights cove in this case, is also returned round the string and into itself.

Balusters.—The mortises shown at the black points, B, B, B, etc., are for the balusters. It is always the proper thing to saw the ends of the tread ready for the balusters before they are attached to the string, then when the time arrives to put up the rail, the back end of the mortise may be cut out, when the tread will be ready to receive the baluster. The mortise is dovetailed, and, of course, the tenon in the baluster must be made to suit. The tread is finished on the bench, and the return nosing is fitted to it and tacked on, so that it may be taken off to insert the balusters, when the rail is being put into position.

Brackets.—In Fig. 103 we show the end of a step on a cut and mitered string, which is bracketed. B shows the bracket and the manner in which the end is finished. Brackets on stairs are generally about $\frac{3}{8}$ of an inch thick, and may be of almost any design that is in keeping with the surroundings. When a stair is bracketed, the point of the riser on its string end should be left standing past the string, the thickness of the bracket, and the end of the bracket miters against it, thus avoiding the necessity of showing end wood or

joint. The cove should finish inside the length of the bracket, and the nosing should finish outside the length of the bracket. When brackets are employed, they should continue along the cylin-

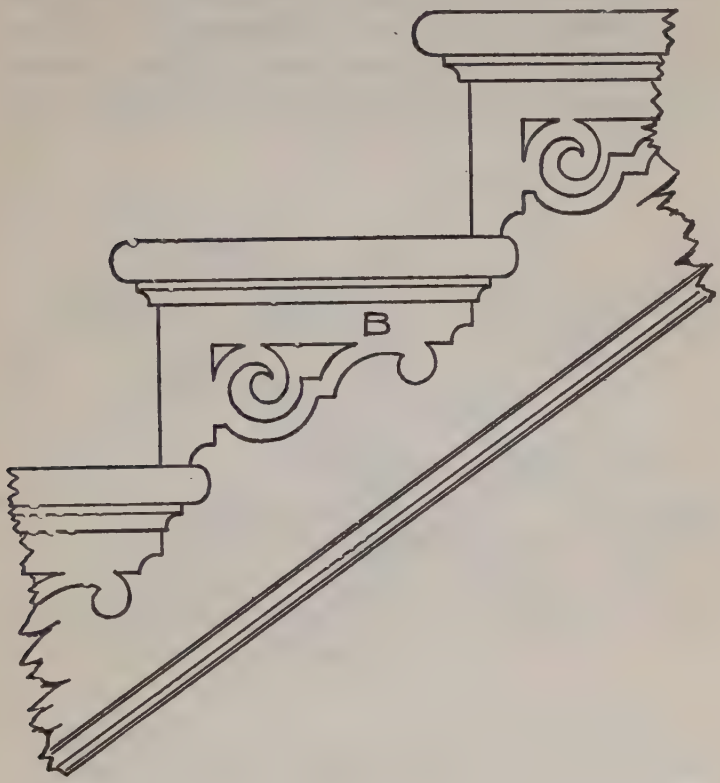

FIG. 103

der, and all around the well hole and trimmers, though they may be varied to suit conditions when continuously running on a straight horizontal facia.

Finish of Wall String at Foot of Stairs.—Fig. 104 shows the manner in which a wall string is finished at the foot of the stairs. S shows the string, with a moulding wrought on the upper edge. This moulding may be a simple ogee, or may consist of a number of members, or may be only a bead, or the edge of the string may be left quite plain; this will be regulated in a great meas-

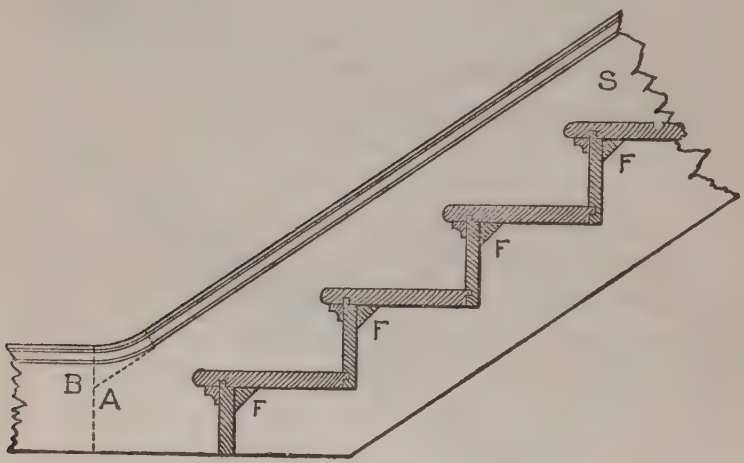

FIG. 104

ure by the style of finish in the hall, or wherever the stairs are placed. B shows a portion of the baseboard, the top edge of which has the same finish as the top edge of the string. B and A together show the junction of the string and base. The dotted line shows when a piece of stuff has been glued onto the string to make it wide enough at the junction to get the ease-off or curve. F,

F shows the blocks glued in the angle of the steps to make them firm and solid.

Finish of Wall String at Top of Stairs.—Fig. 105 shows the manner in which the wall string S is finished at the top of the stairs. It will be noticed that the moulding is worked round the ease-off at A to suit the width of the base at B. The string is cut over the floor horizontally

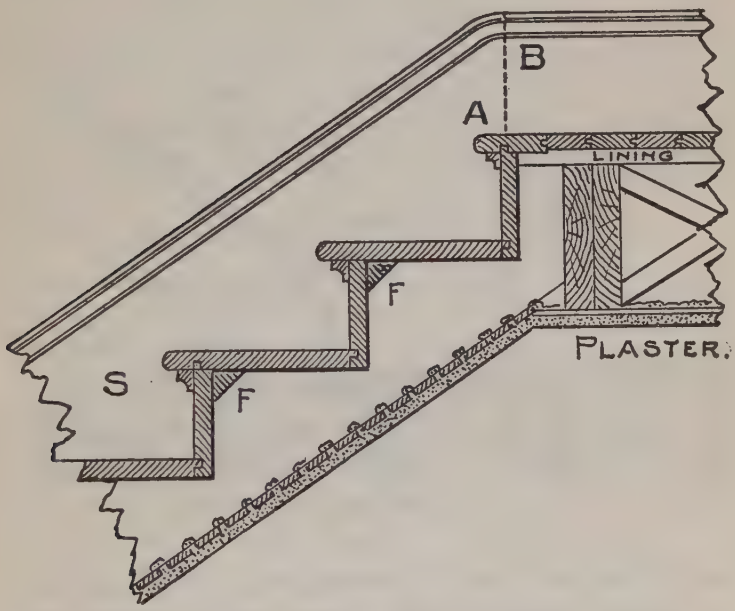

FIG. 105

and vertically or plumb against the joists. The plaster line under the stairs and on the ceiling is also shown.

Open String at Foot of Stairs.—Fig. 106 shows the cut or open string at the foot of the stairs, and

the manner of dealing with it at its juncture with the newel post K. The point of the string should be mortised into the newel two, three or four inches, as shown by the dotted lines, and the mortise made in the newel should be made near the center, so that the center of the baluster will be directly opposite the central line of the newel post. The proper way to manage this is to meas-

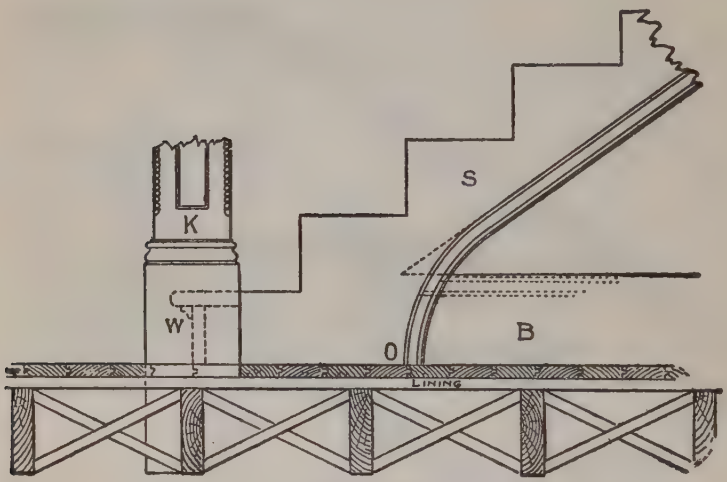

FIG. 106

ure the central line of the baluster on the tread, and then make this line correspond with the central line of the newel post. By a careful attendance to this matter, much trouble will be avoided where a turned cap is used to receive the lower part of the rail. The lower riser, in a stair of this kind, will be something shorter than the ones that follow it, as it must be cut between the

newel and the wall string. A portion of the tread, as well as the riser, will also butt against the newel, as shown at W. If there is no spandril or wall under the open string, it may run down to the floor, as shown at O. The piece O is glued onto the string, and the moulding is worked on the curve.

If there is a wall under the string S, then the base B, shown by the dotted lines, will finish against the strings, and it should have a moulding stuck on its upper edge the same as the one on the lower edge of the string, if any, and this moulding should miter into the one on the string. When there is a base, the piece O is dispensed with.

The square of the newel should run down by the side of a joist, as shown, and be firmly secured to it by iron knees or other suitable devices. If the joist runs the other way, try and get the newel post against it, if possible, either by furring out the joist or cutting a portion off the thickness of the newel. The solidity of a stair, and the firmness of the rail, depend very much on the rigidity of the newel post.

Fig. 107 shows how the cut string is finished at the top of the stairs. This illustration requires no explanation after the foregoing has been examined.

So far we have dealt with those stairs having a bevel at the bottom only; however, there are many modifications of straight and return stairs, that have either two, four or six newels. When

any of those conditions arise, the treatment of strings at their finishing points will necessarily be somewhat different than that described, but the general principles, as shown and explained,

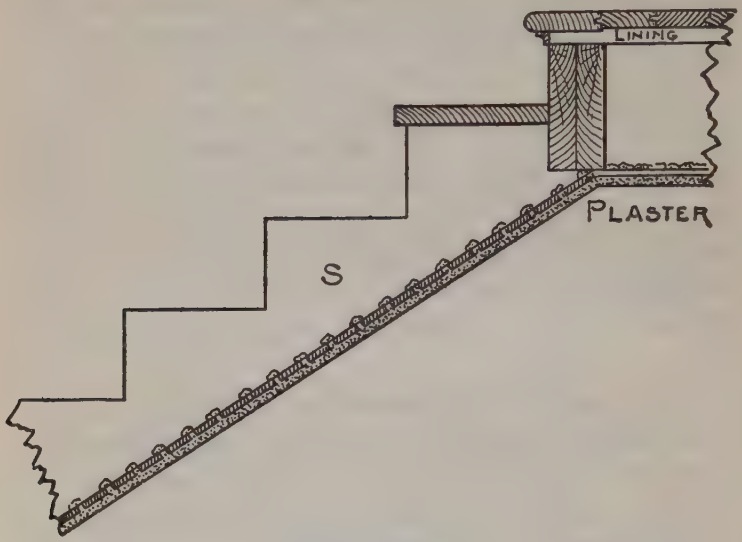

FIG. 107

will hold good. As this work is only intended to cover the simpler class of stair building, we will not enter into the more complicated phase of the work.

Miter Boxes.—One of the most troublesome things the carpenter meets with is the cutting of a spring moulding when the horizontal portion has to miter with a gable or raking moulding. Undoubtedly the best way to make good work of these mouldings is to use a miter-box. To do this make the down cuts B, B (Fig. 108) the

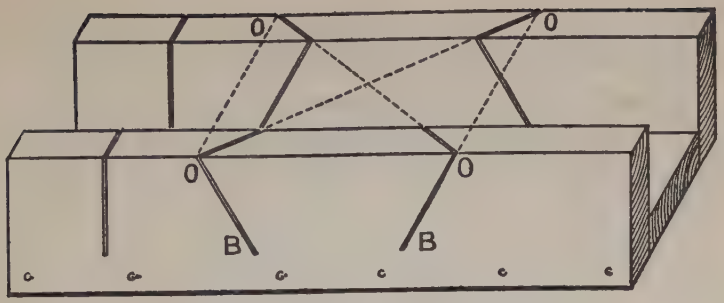

FIG. 108

same pitch as the plumb cut on the rake. The over cuts 0, 0, 0, 0, should be obtained as follows: Suppose the roof to be a quarter pitch—though the rule works for any pitch when followed as here laid out—we set up one foot of the rafter, as at Fig. 109, raising it up 6 inches, which gives it an

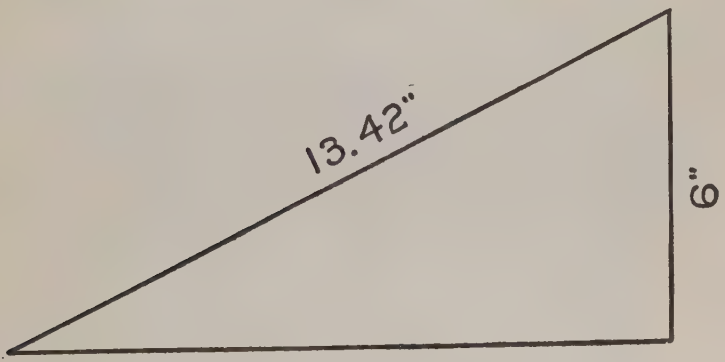

FIG. 109

inclination of quarter pitch; then the diagonal will be nearly 13½ inches. Now draw a right-angled triangle whose two sides forming the

right angle, measure respectively 12 and 13½ inches as shown in Fig. 110.

The lines A and B show the top of the miter box with the lines marked on. The side

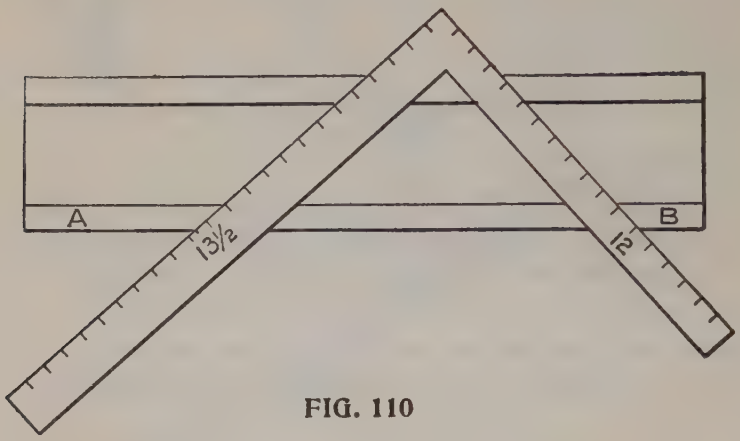

FIG. 110

marked 13½ inches is the side to mark from; this must be borne in mind, and it must be remembered that this bevel must be used for both cuts, the 12-inch side not being used at all.

Another excellent method for obtaining the section of a raking mould that will intersect a given horizontal moulding, is given below, also the manner of finding the cuts for a miter box for same. The principles on which the method is based being, first, that similar points on the rake and horizontal parts of a cornice are equally distant from vertical planes represented by the walls of a building; and, second, that such similar points are equally distant from the plane of the roof. Representing the wall faces of a building

by the line DB (Fig. 111), and a section of the horizontal cornice by DBabcdef, Bab being the angle of the roof pitch; draw lines aa″, cc″, ff″, parallel to DB and intersecting the line ka″, which is drawn at right angles to DB through

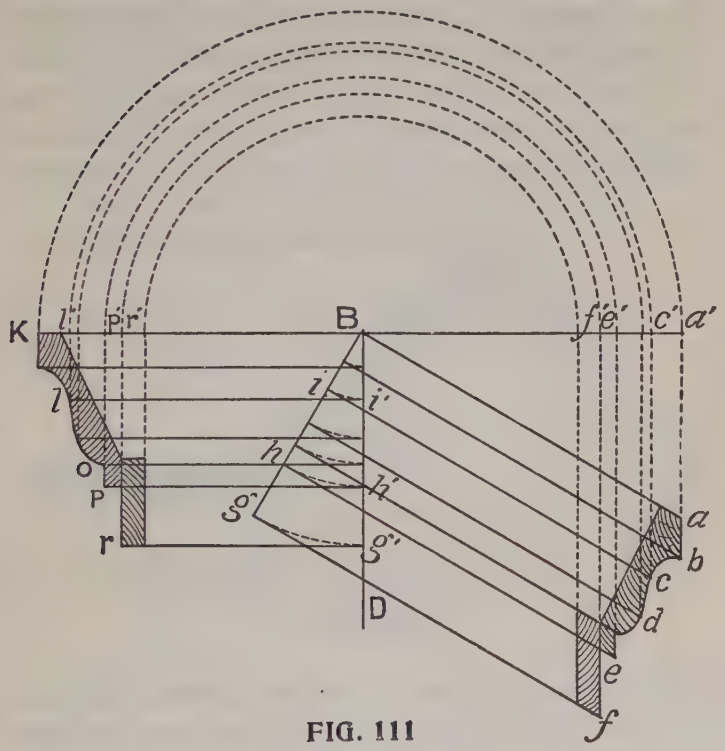

FIG. 111

the point B; then, with B as a centre, describe the arcs a″k, c″l″, etc., intersecting the same line ka″ on the opposite side of DB; after which extend lines from the points r″l″k, parallel to DB. This gives the point k at the same distance

from DB as the points a and a″, and the line ll″ at the same distance as cc″. The rest of the same group of parallel lines are found to be similarly situated with respect to DB.

From Descriptive Geometry we have the principle, that if we have given two intersecting lines contained in a plane, we know the position of that plane; hence we may represent the plane of a roof by the line Ba and Bk (Figs. 111 and 112); and since it will be most convenient to measure the distances required in a direction

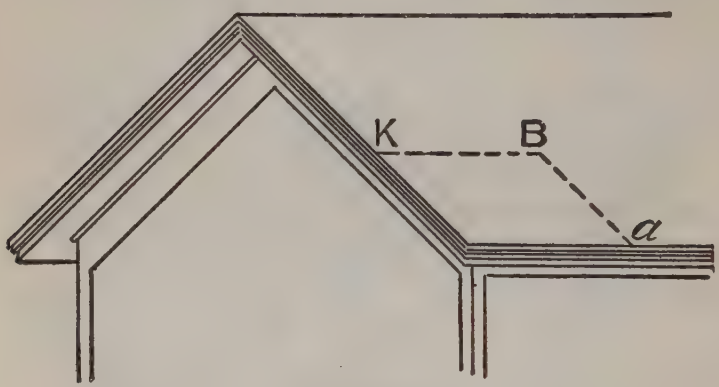

FIG. 112

perpendicular to that plane, in following out the principle draw lines from the points cef, etc., parallel to Ba and intersecting the line Bg, which is made perpendicular to Ba. This gives us on Bg the perpendicular distance of the points cef, etc., from the line Ba. From the intersections of these lines with Bg, and with B as a center, describe arcs intersecting the line DB at i″, h″,

g″, etc.; from these intersections with DB draw lines i″l, h″p, g″r, etc., parallel to Bk, until they intersect the first group of lines drawn from the same point on the horizontal section which will give the similar point of the rake section. Taking the point l, for example, we have, as before proved, l at the same distance from DB as c, and i being at the same distance from Ba as c, Bi being equal to Bi″, and Bi″ equal to ll″, ll″ is equal to Bi″, and consequently, l is the same distance from Bk as c is from Ba, which is in accordance with principle already shown. The intersection of each set of lines being found and

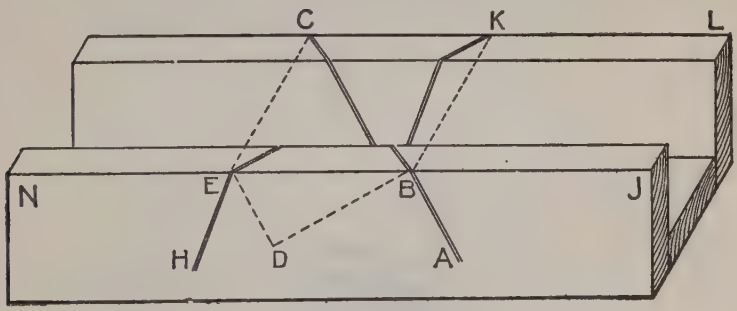

FIG. 113

marked by a point, the contour of the moulding may be sketched in, and the rake moulding, of which the section is thus found, will intersect the given horizontal moulding, if proper care has been taken in executing the diagram.

Fig. 113 shows how to find the miter cut for the rake moulding, the cut for the horizontal one being the same as for any ordinary moulding.

Take an ordinary plain miter box, NJL, and draw the line AB, making the angle ABJ equal to the pitch angle of the roof. Draw BD perpendicular to AB, and extend lines from B and E square across the box to K and C; join BC and EK. ABC will be the miter cut for two of the rake angles; HEK will be the cut for the other two angles, the angle HEN being equal to the angle ABJ. In mitering, both horizontal and rake moulding, that part of the moulding which is vertical when in its place on the cornice, must be placed against the side of the box.

Part VIII

COMBINATION SQUARES

Universal Square—Hight's Union Combination Square—Ideal Bevel Try-Square—Topp's Framing Tool

The ordinary Steel Square, fully treated of in the first part of this work, is, as has been clearly demonstrated, a constructive tool of wonderful possibilities in the hands of the skillful workman. The labor-saving tables and scales stamped upon the blade and tongue, as we have seen, furnish the workman with an ever-ready solution to almost any problem that may arise in roof framing or in laying out hoppers and hopper bevels.

But modern requirements have demanded even a more effective tool than this. Success in the builder's art to-day depends not so much upon the skill of the artisan as upon the superior quality of the tools he works with. Ingenious inventors, availing themselves of this fact, have placed at the disposal of American workmen certain improved forms of the Steel Square, with various time and labor-saving devices attached. These perfected tools are commonly known as "Combination Squares." Some of them do more than furnish the workman with a constructive tool of the highest excellence, seeming literally to give him brains and an in-

creased number of hands, correspondingly enhancing the quality and quantity of his work.

Every workman, therefore, who uses the Steel

FIG. 113A

Square, should be informed as to the latest types of these time and labor-saving tools. Descriptions of the more important of them, together

with the inventors' directions for their use, are here given.

Universal Square.—This tool is shown in Fig. 113a. It is a combination square for the use of carpenters and other mechanics, and can be used as a try-square, bevel square, pitch-cut square, hip and valley-cut square, and miter square. To operate, you simply reverse it from side to side.

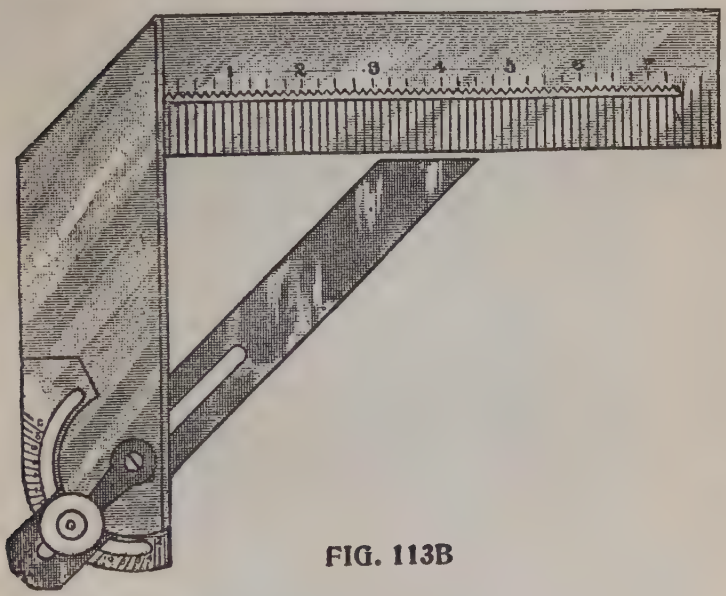

FIG. 113B

It marks $\frac{1}{8}'$ on one side, and $\frac{1}{4}'$ on the other. It takes the place of many tools, and is always ready for any use, there being nothing to adjust or change about it.

Hight's Union Combination Square.—This is the name given to the tool illustrated in Fig. 113b. All the combinations of this tool are availabie at

the same time. The notches in the edge of the slot in the blade are $\frac{1}{8}$ of an inch apart, and are to enable it to be conveniently used as a gauge. To use the bevel, loosen the clamping bolt, draw the protractor out to the angle required, and clamp in place. Set the protractor by the scale marked on the circular segment. This scale is marked to indicate the angle expressed in inches rise for twelve inches base, when set on the figure 6, in the first series. The angle is one which will give rise of six inches in twelve, or the angle for the bottom of rafter $\frac{1}{4}$ pitch. Set on the 6 in the second series and you have the angle for the top of the rafter for the same pitch. So with all the figures in the first two series. The first series is from 1 to 12, the second from 12 to 1. The third series is for convenience, when it is not convenient to turn the tool over to get reverse angle. The circular segment is laid off in degrees on the lower side, which will readily show you the figures on a square with 12 required to cut any desired number of degrees. The notch in the end of the protractor will enable the tool to be used for a gauge to get in corners, guaging for setting hinges and beveling edges, etc.

Ideal Bevel Try-Square.—This tool, shown in Fig. 113c, is a combination of a bevel and a try-square. The inventor of the tool claims that by using it a carpenter can accomplish more than ordinarily in laying off work. (1) He can mark the square and bevel cut with one continuous stroke of pencil without having to change square.

(2) It is easy to change the bevel blade to any angle, as the slot in the bevel blade will allow shifting so it will always come to corner of square blade. (3) By setting bevel at right angle to

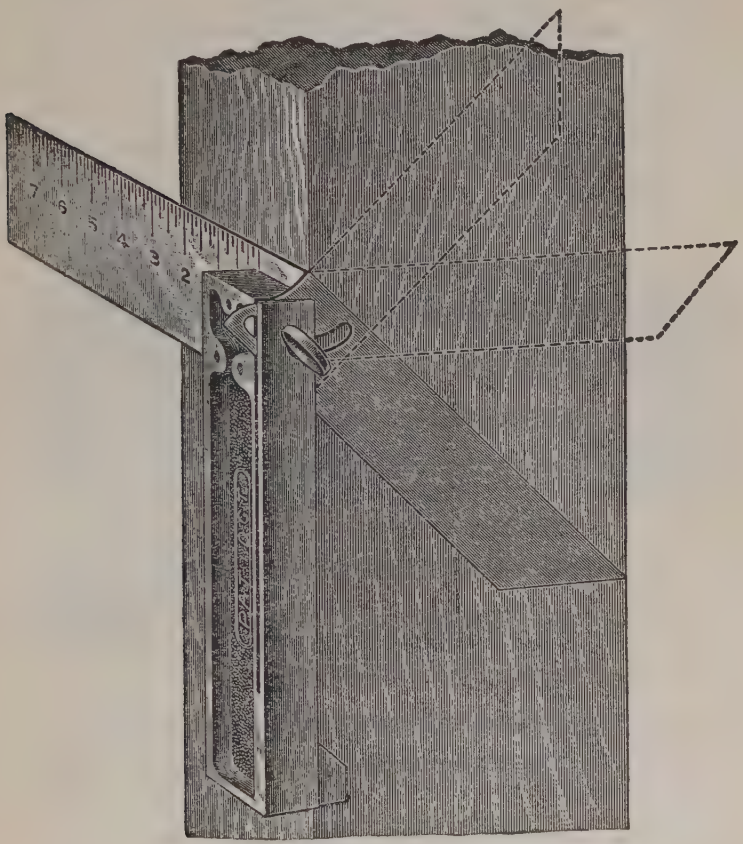

FIG. 113C

Try Square blade, both marks can be obtained without changing the position of square. (4) For beveling a board on edge, swing bevel blade over

to back of handle, which gives a straight surface on handle. (5) When bevel blade is not needed, close same in handle, and you then have a regular Try Square. (6) The Try Square blade is graded in eighths, and the figures are stamped very plain. All parts, it is claimed, are made of the best steel, except the handle, which is of a composition metal that will not rust.

Topp's Framing Tool.—Is a very ingenius combination square, consisting of a T square, a try

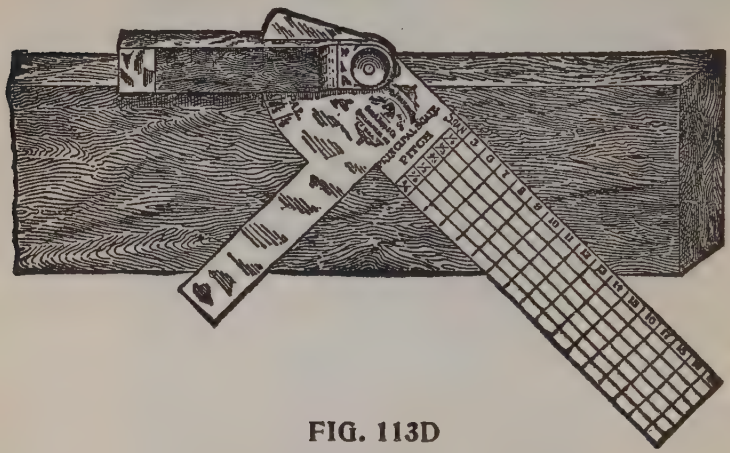

FIG. 113D

square, and a bevel square. It gives all the cuts for different pitches on all kinds of rafters, and the lengths of same, for any plan. Fig. 113d shows the manner in which this tool is used when marking out rafters.

Part IX

KEY TO STEEL SQUARE

The Rafter Table — Lengths and Cuts for One-third Pitch — Side Cut of Jack — Side Cut of Octagon Jack — Side Cut of Hip or Valley — Table of Tangents — To Find Miter for any Regular Polygon — To Draw a Five-Pointed Star — To Frame Timbers at any Degree of Pitch — The Curve for an Octagon Hip — To Find Shape of Jack — To Find Backing for a Curved Hip

The Subject of Degrees and the part they play in Carpentry and Joinery has been overlooked by the woodworkers in general. Every carpenter should understand the divisions of the circle called degrees and the relation they have to the steel square. When this is understood, it is just as easy to frame a roof for any kind of angled building, giving all of the cuts and bevels, as it is for the square cornered building. The same rule applies to all without the aid of any other instrument than the common steel square. How to apply the Steel Square is well explained in the little device recently placed on the market and known as the "Key to the Steel Square," of which the following pages are a brief description.

The above title is the name given to a new framing device, and is meeting with popular favor among carpenters and builders throughout the

country. It is of celluloid, three inches in diameter, on either side of which is pivoted at the center a disk, one side giving the lengths and cuts for the common rafter, having a rise from 1 to 24 inches to the foot, also the corresponding lengths, cuts, and bevels for the octagon hip or valley, and for the hip or valley resting on the right angled corner, while on the other side is given the seat and plumb cuts for rafters and braces having a rise from 1 degree to 90 degrees. It also gives the length of sides and miter cuts for all regular polygons, or the framing of timbers at any degree, and shows how to apply the steel square to obtain the cuts.

The Rafter Table.—Fig. 114 illustrates the side containing the rafter table; it is divided into twenty-four sections, radiating to a common center. These sections represent from 1 to 24 inches rise to the foot in run. The first figures represent the rise, and the three following sets of decimal numbers represent the lengths in inches of the common rafter, octagonal hip and the common hip or valley rafter respectively. The heavy-faced fractional numbers designate the pitch or proportion of the rise of the roof to a foot run, while just beneath the fractional numbers is given the same value in decimal fractions to the one-hundredth part of an inch. The latter is placed here for convenience in finding the near equivalent in common fractions for the decimal part of an inch.

The Revolving Disk contains the title and

abbreviated instructions. By turning the disk until the slot rests opposite the pitch desired, only the lengths and cuts for that pitch will be exposed, thereby preventing errors.

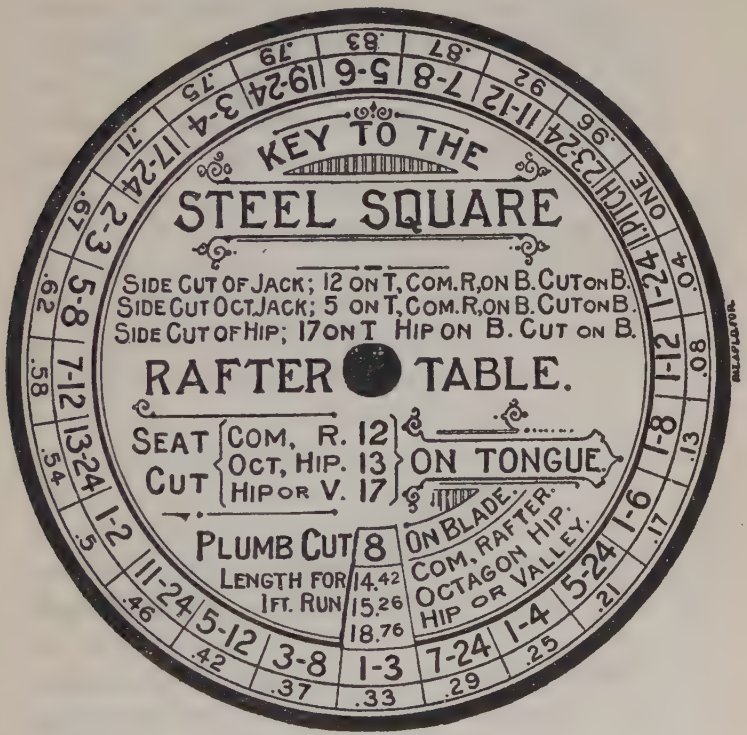

FIG. 114

Example: To Find the Lengths and Cuts For the One-Third Pitch.—Operation. Turn the disk until the slot is opposite one-third and you have, as shown in Fig. 114: 12 on the tongue and 8 on the blade. The tongue will give the seat cut

and the blade the plumb cut for the common rafter.

For the Corresponding Octagon Hip and the Common Hip or Valley substitute 13 and 17 on the tongue respectively, the tongue always giving the seat cut and the blade the plumb cut. The lengths of the rafters for a one-foot run are found to be 14.42, 15.26, and 18.79 for the common rafter, octagon hip and common hip or valley, respectively. Having the lengths given for one foot in run, it is an easy matter to find the lengths of the rafters for any run in either feet or inches by multiplying the lengths here given by the number of feet or fractions of a foot in the run, and point off as many places in the product as there are decimal figures used in the solution, and reduce to feet and inches. Fractional figures may be avoided in the run by dropping them and finding the length only for the number of feet, and then from the plumb cut measure square out the amount of the fraction, which will give the point for the proper plumb cut.

To Find the Common Difference in the Length of Jacks multiply the length of the common rafter (14.42) by the number of inches in the spacing, and divide by 12. Thus, if the jacks be placed 16 inches on centers, 14.42x16=230.72; divide by 12=19 and two-twelfths inches.

To Find the Common Difference for the Octagon Jack multiply 14.42 by 2.4, and the product by the spacing, and divide by 12. Thus: 14.42 x2.4=

34.608 x 16=553.728 divide by 12=46 and one-twelfth inches.

For the Side Cut of the Jack.—Take 12 on the tongue and 14.42 (14 and five-twelfths) on the blade. The blade will give the desired cut.

For the Side Cut of the Octagon Jack.—Take 5 on the tongue (because 5 is practically equal to the side of an octagon when the diameter is one foot) and 14 and five-twelfths on the blade, the blade giving the cut.

The figures that give the side cut of the jacks in either of the above cases will also give the cut across the face of the roof boards to fit in the valley or over the hip. The tongue gives the cut.

For the Side Cut of the Hip or Valley.—Take 17 on the tongue and 18.79 (18 and 19-24) on the blade, the blade giving the cut. Backing of the hip. Take 8 on the tongue and 18.79 on the blade. The tongue will give the required bevel. A quicker way, however, is to set off ½ the thickness of the hip along the line of the seat cut (or a line parallel with it), which will give the gauge point from which to remove the wood to the center of the back of the hip. The backing for the octagon hip is practically one-half of that for a hip resting on a square corner.

Table of Tangents.—Fig. 114a represents the table of tangents.

The figures in the two circles represent the degree. Those in the inner circle represent the tangents, and those in the outer represent the

co-tangents, the sum of the two always equaling 90 degrees.

The set number is in either case 12 on the tongue and tangents on the blade. The blade

KEY TO THE
STEEL SQUARE
TABLE OF TANGENTS.
OUTER FIGURES (IN THE CIRCLES) REPRESENT DEGREE (OF PITCH)
BLADE GIVES PLUMB CUT FROM 1° TO 45°
CHANGING TO THE TONGUE FROM 45° TO 90°
SET NUMBER 12 ON TONGUE.
TANGENT 693 ON BLADE.

FIG. 114A

gives the cut up to 45 degrees, then it reverses to the tongue from 45 degrees to 90 degrees.

Example: To Frame a Roof With 30 Degrees Pitch.—Operations: Turn the slot till it rests opposite 30 degrees and you have, as shown in Fig. 114b:

Common Rafter.—Take 12 on the tongue and 6.93 (6 and 11-12) on the blade.

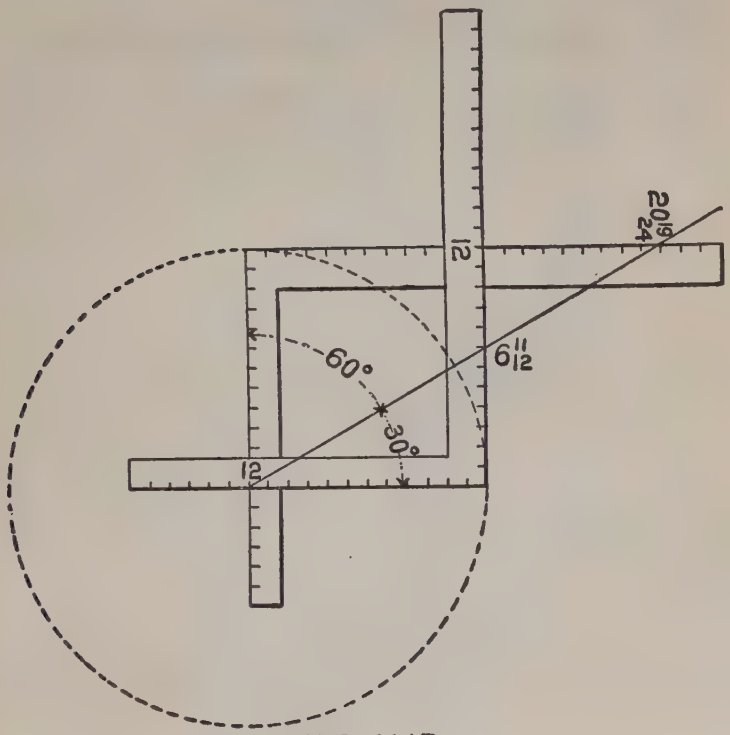

FIG. 114B

Octagon Hip.—Take 13 on the tongue and 6 and 11-12 on the blade.

Hip or Valley.—Take 17 on the tongue and 6 and 11-12 on the blade. The tongue in either of the above cases gives the seat cut and the blade the plumb cut.

Side Cut of Jack.—Take 12 on the tongue and the diagonal length from 12 to 6 and 11-12 taken

on the blade. The blade will give the cut. Side cut of octagon jack. Take 5 on the tongue and proceed as for the common jack

Side Cut of Hip or Valley.—Take 17 on the

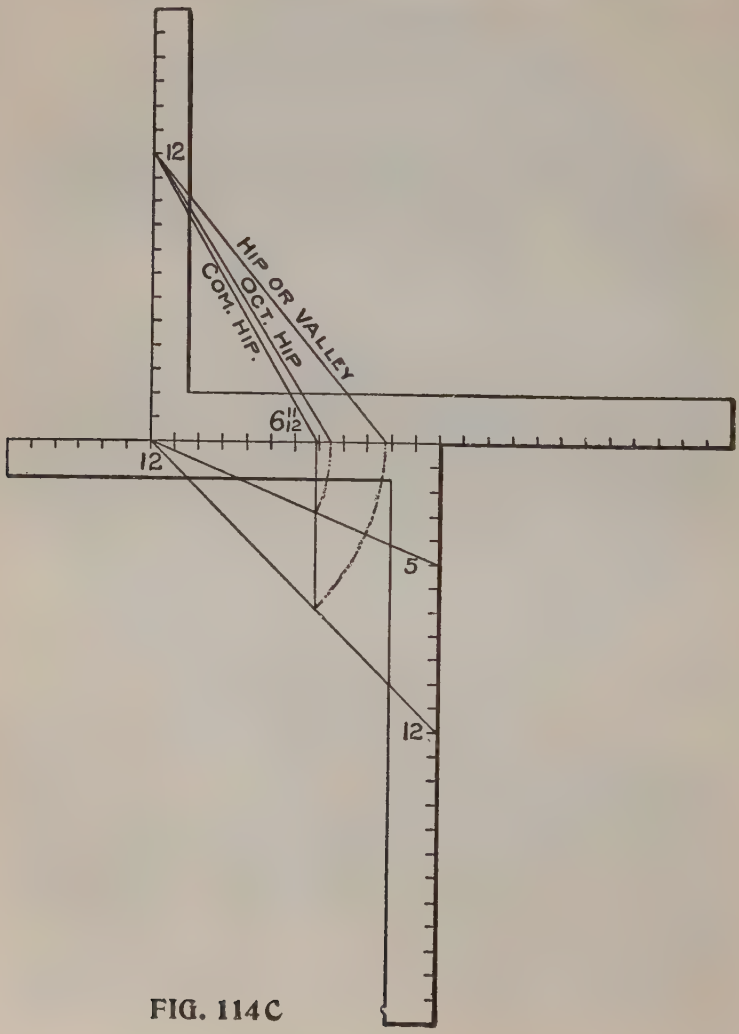

FIG. 114C

tongue and the length from 17 to 6 and 11-12 taken on the blade. The blade will give the cut. If the roof be 60 degrees pitch proceed the same as for the 30 degrees pitch (using the same figures), but the cuts are reversed on the square. However, this only applies to the seat and plumb cuts of the common rafter. The same may be

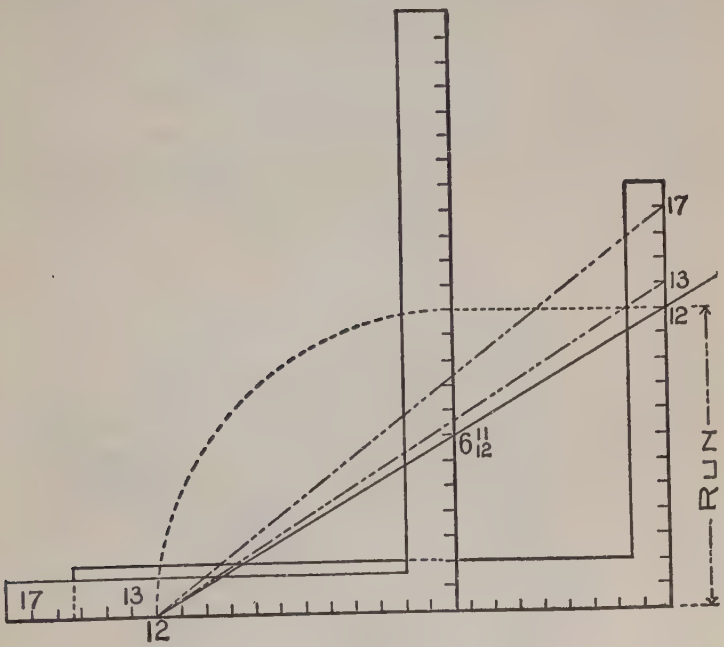

FIG. 114D

obtained for the hips, as shown in Fig. 114c, but the lengths of the rafters are not so readily obtained as before because what was the run is now the rise. To get the lengths by scale it is necessary to extend the pitch lines till the base

or run of the common rafter equals 12 inches, as shown in Fig. 114d.

To Find the Miter for Any Regular Polygon.—Divide 180 by the number of sides in the polygon.

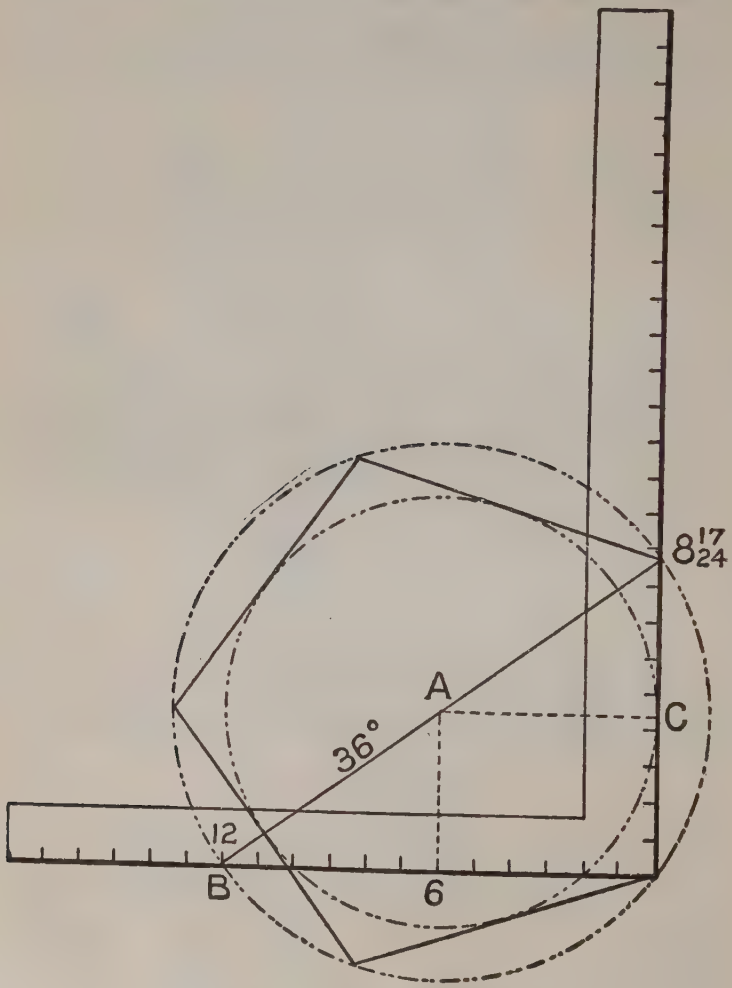

FIG. 115

The quotient will be the degree of the miter. Example: Find the miter for a pentagon. 180 degrees divided by 5=36 degrees. Turn the slot to 36 degrees and we have 8.72 (8 and seventeen-twenty-fourths). Take 12 on the tongue and 8 and 17-24 on the blade, the blade giving the miter. The figures on the blade also give the length of the sides of the pentagon when the inscribed diameter is one foot. By squaring up from 6 on the tongue as shown will locate the center at A. A-C is the radius for the inscribed diameter, and A-B the same for the circumscribed diameter.

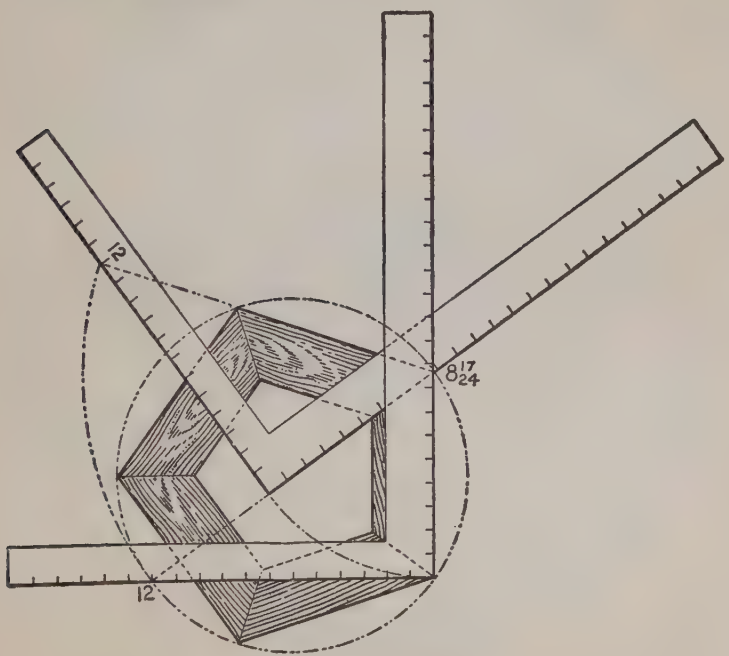

FIG. 115 A

If we let 8 and 17-24 act as a pivot as shown in Fig. 115 and swing the blade till it rests along the 36 degree line, it will show as in Fig. 115a. The 12 on the tongue will rest in line with one of the sides of the pentagon and the blade will rest along the line of the miter, thus proving that the latter gives the cut. The figures 8 and 17-24 also represent the length of one of the sides when the inscribed diameter is one foot.

Polygons of any size may be drawn as shown in Fig. 115b. However, it is better to multiply

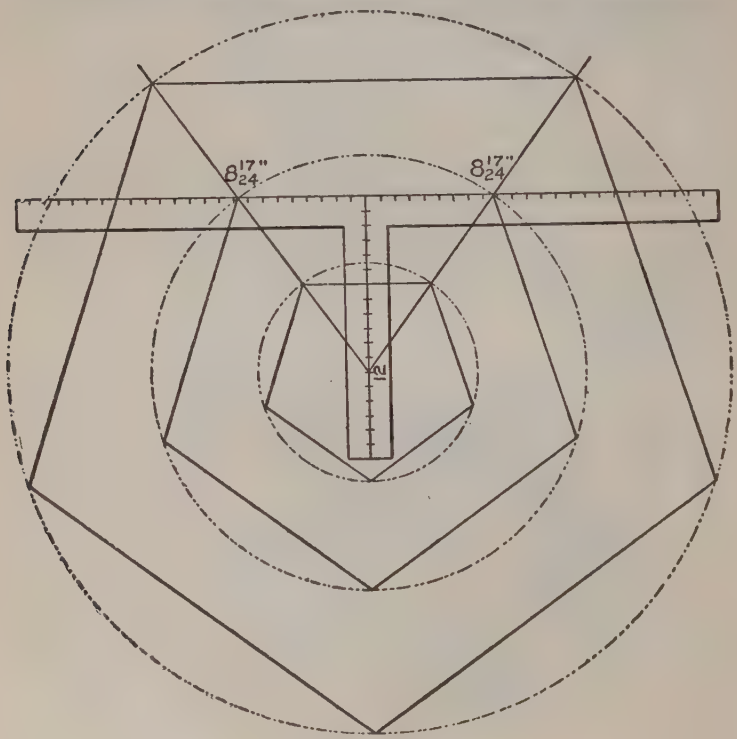

FIG. 115B

the desired diameter by the decimal number given and reduce to feet and inches as follows: Suppose we wish to make a pentagon frame ten feet inscribed diameter, 10x8.72=87.20 inches, or

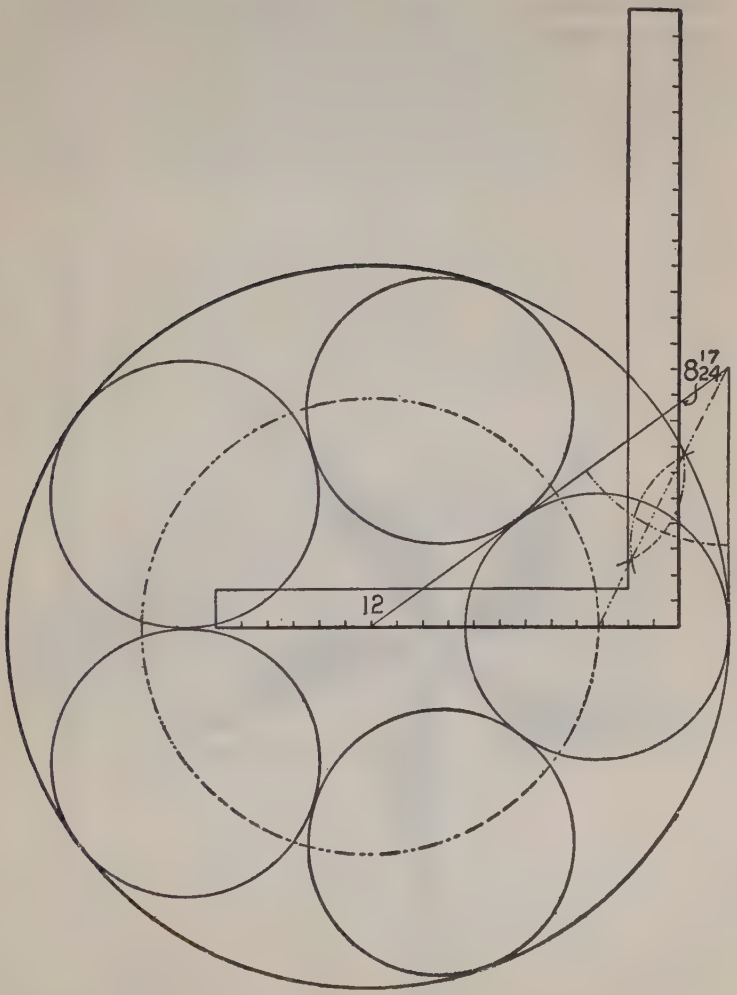

FIG. 115C

7 feet 3 and 5–24 inches will be the length of the sides. If we wish to put five circles inside of a large circle it may be done as shown in Fig. 115c. The given circle may be of any size and the figures used on the steel square are the same as those used in the preceding illustrations. From this it will be seen that it is the degree line that governs the layout of the diagram. If we wish to put four circles inside of a given circle then the degree

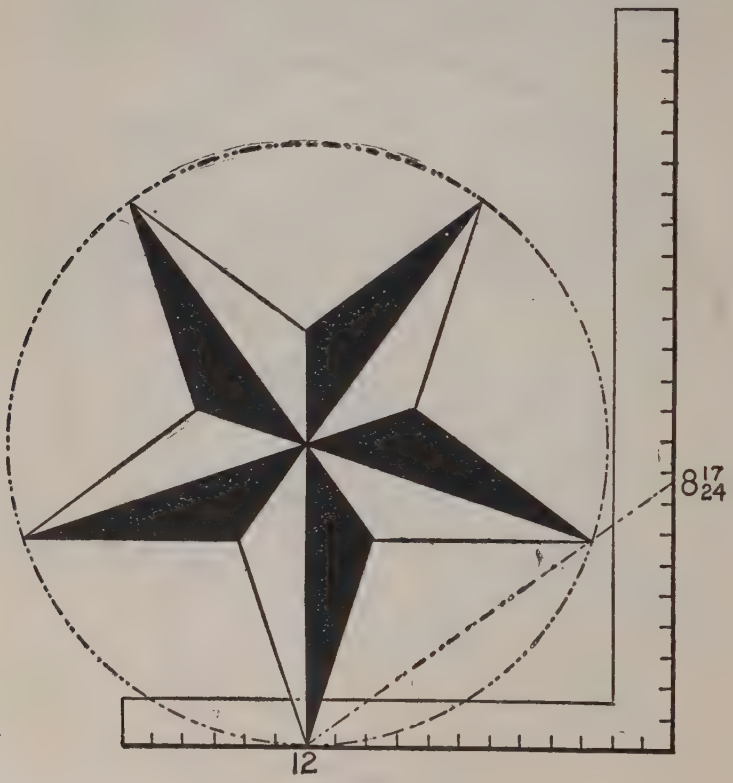

FIG. 116

line would rest at 45 degrees and intersect the blade at 12; or if we wish six circles, the degree line would rest at 30 degrees and the intersection on the blade would be at 6 and 11-12 inches.

If we wish to draw a five pointed star it may be done as shown in Fig. 116, and may be of any size

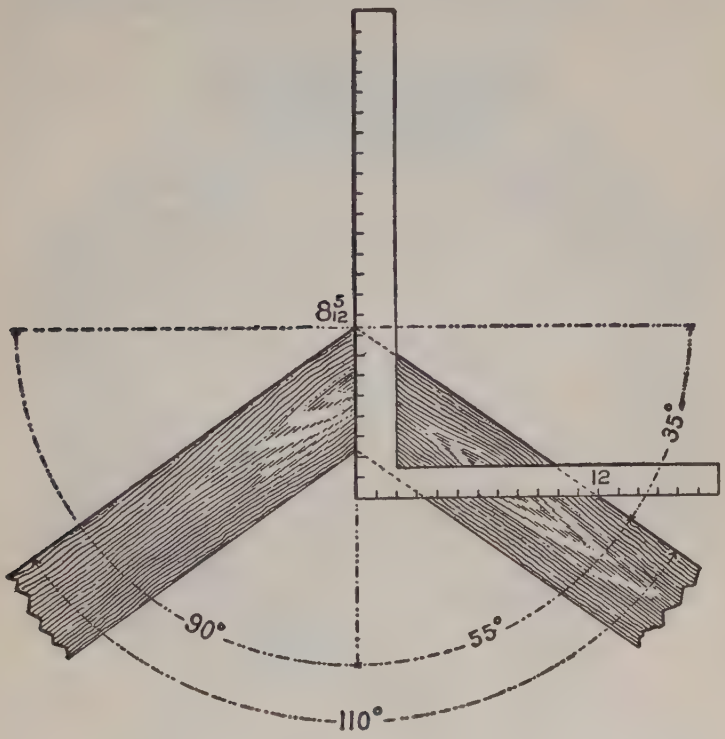

FIG. 116 A

desired by setting off the radius at a point directly above 12 on the tongue, and where the circumference cuts the degree line as from 12 to A will be the proper spacing of the points of the star on the circumference.

To Frame Timbers at Any Degree of Pitch.—Frame two pieces at an angle of 110 degrees. It is evident that the miter should stand at half way between the angle, or at 55 degrees; and 55 degrees from 90 degrees leaves 35 degrees, and we find the tangent for 35 degrees is 8.4 (=8 and 5-12). Therefore, 12 on the tongue and 8 5-12

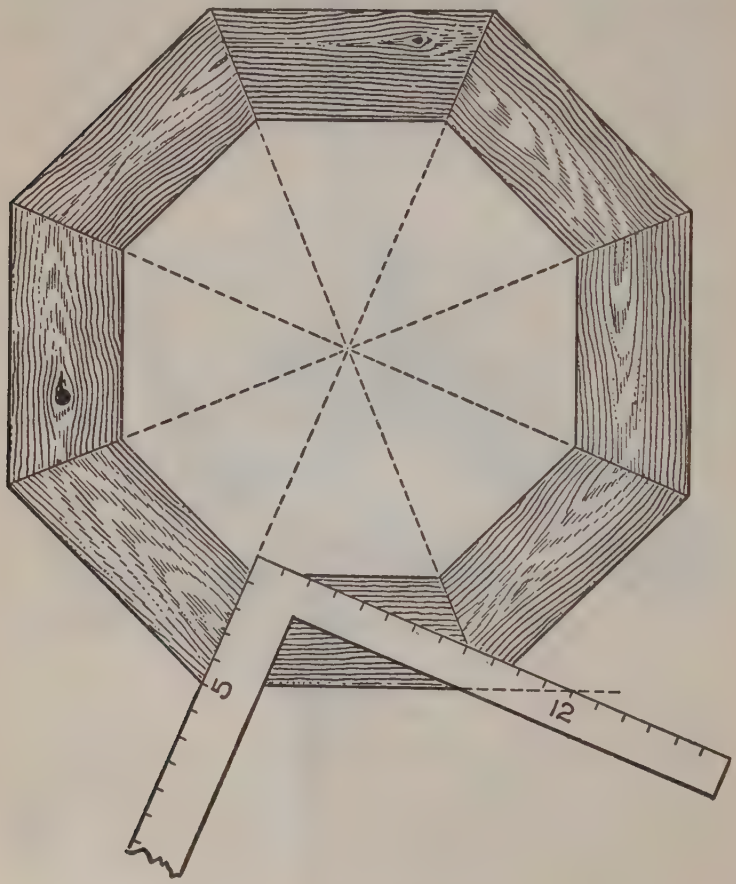

FIG. 116 B

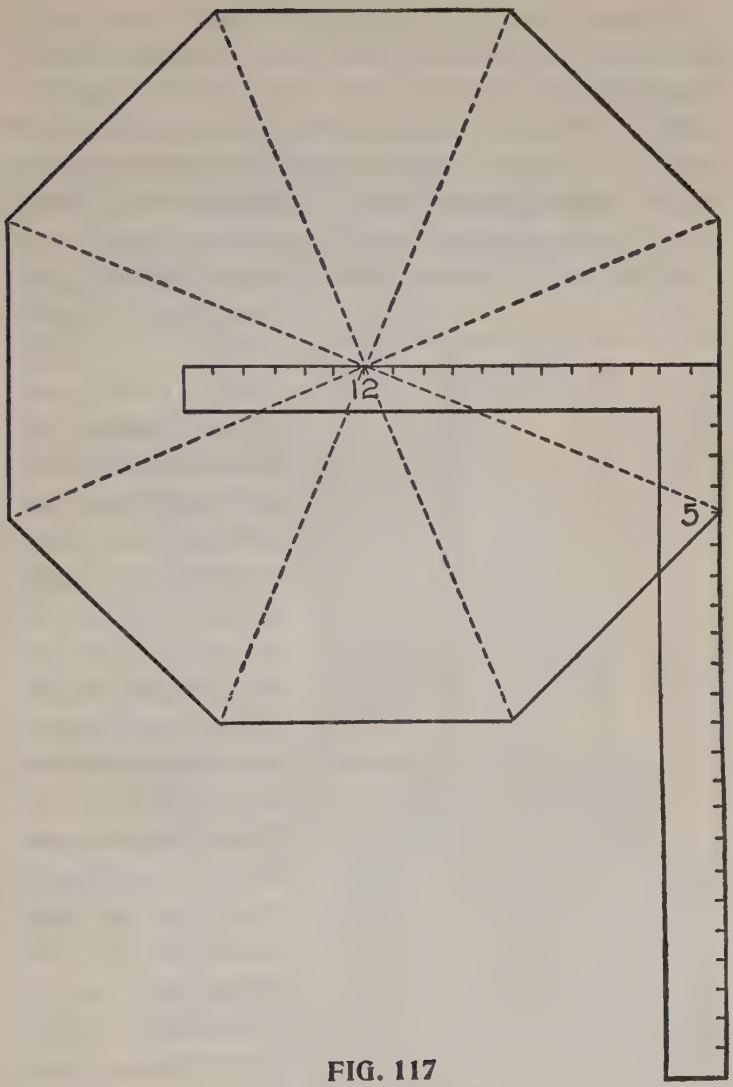

FIG. 117

on the blade will give the miter, the blade giving the cut, as shown in Fig. 116a.

Though it may seem that some of these problems are of but little value on account of the small demand for their use, yet to know how to correctly handle the simpler forms is to know them all. It is true that the carpenter is not often called upon to frame polygonal roofs other than for the square or octagon shape, yet to be able to do so makes him a more finished and competent workman.

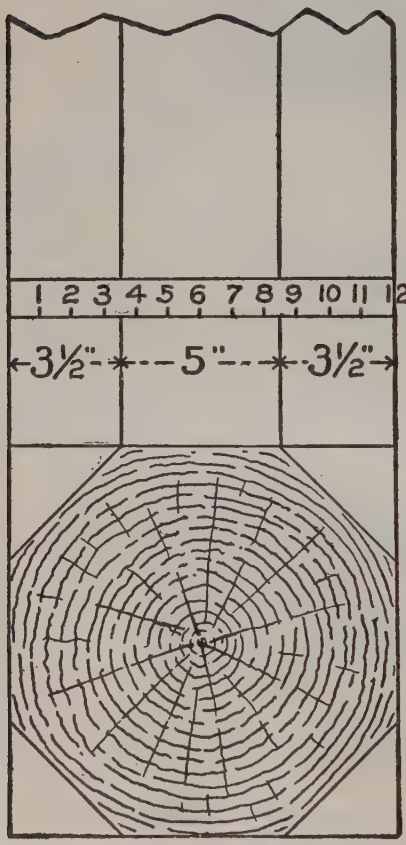

FIG. 117 A

The Octagon for an Example.—With this in view we will take the octagon for an example; we have found that 12 and 5 taken on the tongue and blade of the square give the miter as shown in Fig. 116 B. These figures also form the angle that the hip rests with the common rafter as shown in Fig. 117. They also form the basis for all of the cuts. We also find for the true octagon

the run of the hip diverges from the tongue 5 inches in a one foot run. Hence the side of an octagon one foot in diameter must be 5 inches at shown in Fig. 117A, or five-twelfths of its diameter. This proportion always exists whether it be inches, feet or yards. Thus the side of an octogan one inch in diameter would be five-twelfths of an inch. A 6-inch diameter would be 6x5-12= 30-12 or 2½ inches, as shown in Fig. 117b.

Again from 12 to 5 measures 13 inches, a gain of one inch to one foot run of the common rafter, therefore the run of an octagon hip is one-twelfth longer than that of the common rafter.

The Curve for an Octagon Hip.—Now let us apply this proportion in developing the curve for an octagon hip.

In Fig. 117c draw BA. Place the square as shown, and draw line AC, and square down from B to C. AB is the run of the common rafter. A C is the run of the hip, and is one-twelfth longer than AB; BC is equal to one-half the length of the plate, and is five-twelfths of the length AB. The whole figure bounded by A, B and C,

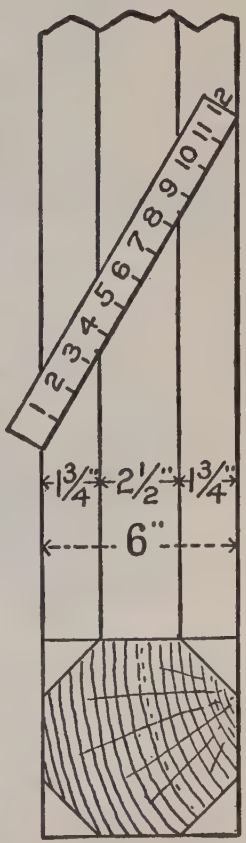

FIG. 117B

is one-sixteenth of the plan, and is all that is necessary to draw.

Now, lay off the rise AD, and the desired curve

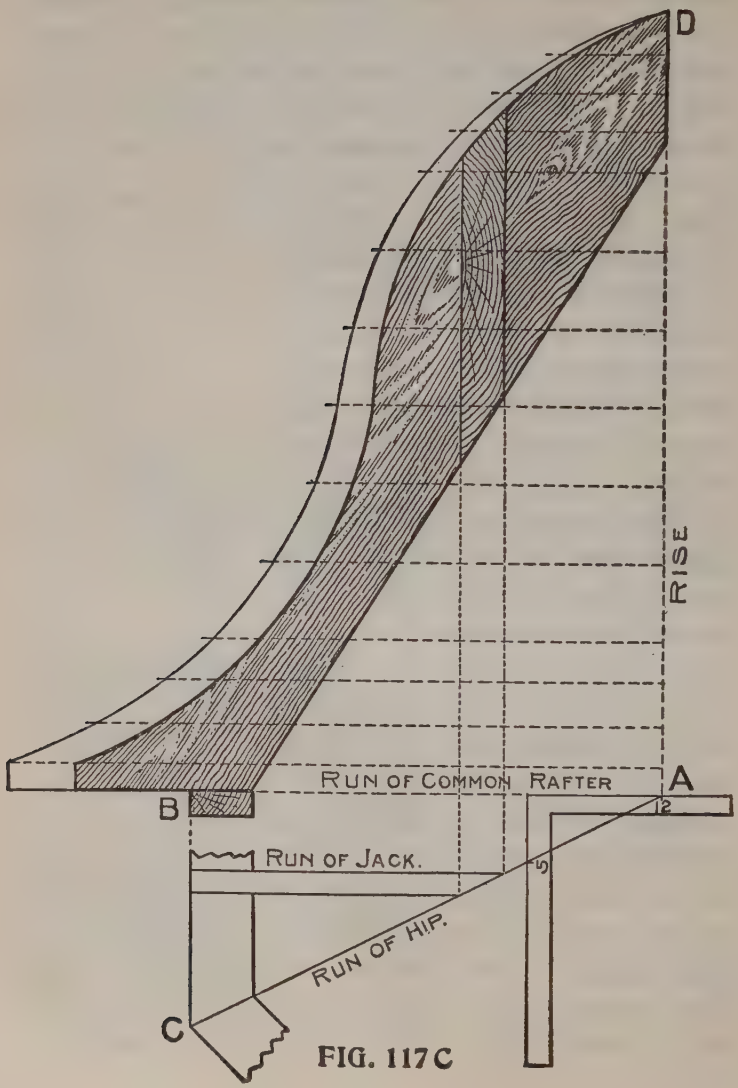

FIG. 117C

for the common rafter, and draw any number of lines parallel with AB, from the rise to a few inches beyond the curve of the common rafter. Now, measure these lines from rise to curve, and

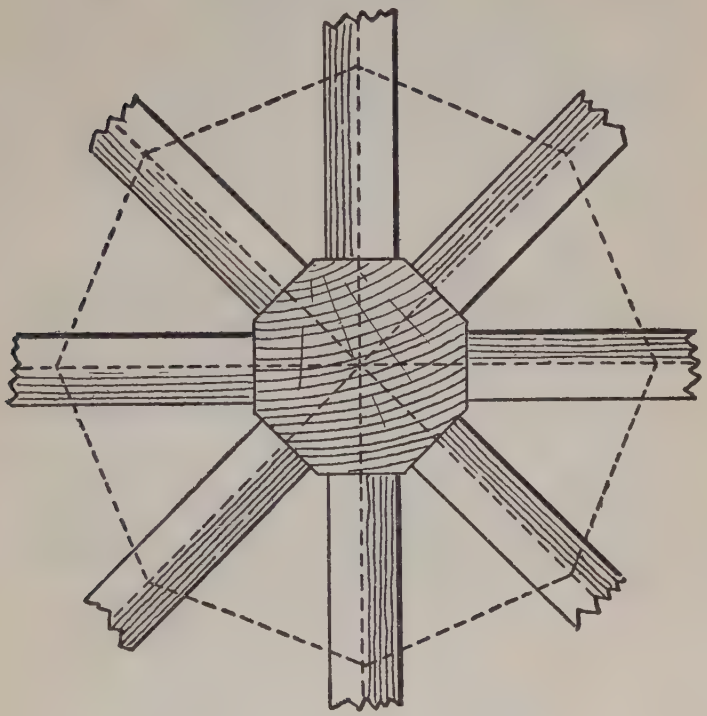

FIG. 117 D

for each foot and fraction of a foot add to same line as many inches and twelfths of inches as there are feet and inches in length.

In other words, if a line 6 feet and 9 inches long, add to its length 6 and nine-twelfths inches and make a dot. After all lines have been thus

measured, run an off hand curve through the dots, and the corresponding hip is determined.

To Find Shape of Jack.—The jack being a part of the common rafter, its shape is easily found by laying off the run and squaring up as shown.

It is thought better to run only the hips to center, and by using an octagon-shaped block or pole set with the sides, so that the hip will rest against it squarely, so as to get good nailing, as shown in Fig. 117d; besides letting the block extend above roof, furnishes an excellent stay for a finial.

To Find the Backing for a Curved Hip, measure back from the face, on the horizontal lines, one-half the thickness of the hip and run an off hand curve, as previously done for the face line, and this will be the proper gauge line along the side of the hip. It is very important that the hips should be backed in roofs of this kind, because the shape is ever changing and the backing should correspond.

Part X

POSSIBILITIES OF THE STEEL SQUARE

Polygon Family Circle — Laying out a Circular Frame — Framing to Any Degree — Ornamental Figures in Miter Work — Arrangement of the Triangle — Application of Degrees — Drawing a Heptagon — Tangents and Co-Tangents — Degree Line of Triangle and Hexagon — Laying Off Degrees with Compasses — Foundation of Miters — Fractional Value of Decimals.

What may not be accomplished with the aid of the steel square in the construction of useful and ornamental diagrams would indeed be a hard question to answer. It is safe to say that there can be no tool devised that will ever supersede the steel square in covering so wide a range in the various construction arts. It is all contained in the simple scale of measure in connection with the 90 degrees formed by the arms of the steel square ready to solve the most intricate problems when knowingly handled by the operator.

In presenting these illustrations, it is our aim to put them in such a way that the reader will readily understand the principle involved so that they may be intelligently reproduced, and thereby assist in opening up the way for much useful information.

Polygon Family Circle.—In Fig. 118 is shown the polygon family circle. In this, we show

eight of the polygons enclosed in a circle, the center of which may be at a point anywhere on a perpendicular line above twelve on the tongue of the steel square. In this case it is taken at nine inches above, thereby giving a circle of eighteen inches in diameter. Where the circle cuts the miter lines, as from 12 to A of the triangle, will be the length of one of the sides and from which the others may be spaced. The

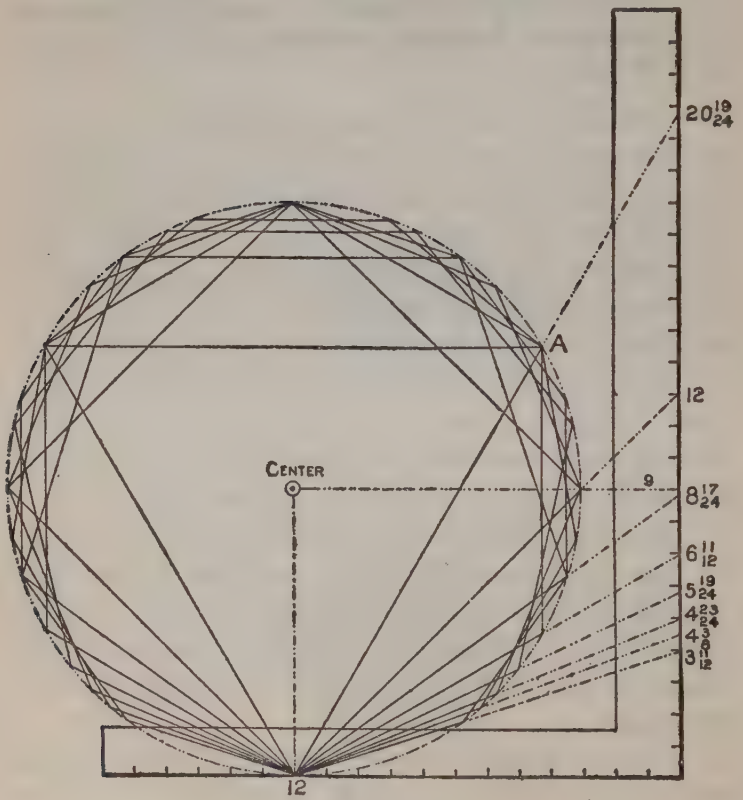

FIG. 118

reader will notice this, that a corner of each polygon is resting at 12 on the tongue, while in the next illustration, as shown in Fig. 119, they are, so to speak, run down at the heel. In this

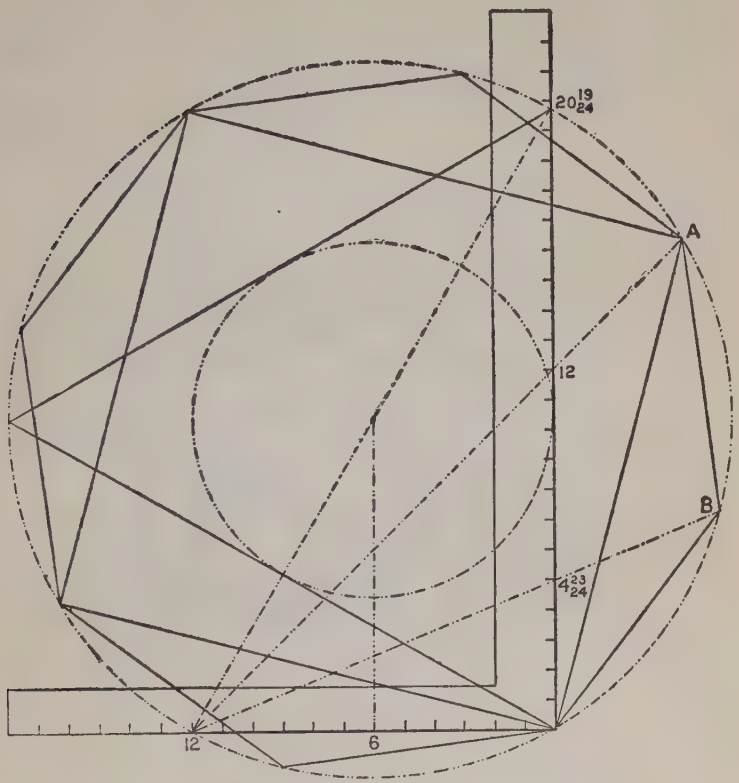

FIG. 119

illustration only the triangle, square and octagon are shown and are enclosed in the circumscribed diameter of the triangle with an inscribed diameter of one foot. In this the lengths of the sides of

the polygons are determined from the heel of the steel square to the intersection of the miter lines with the circle as from the heel to A and B for the square and octagon respectively.

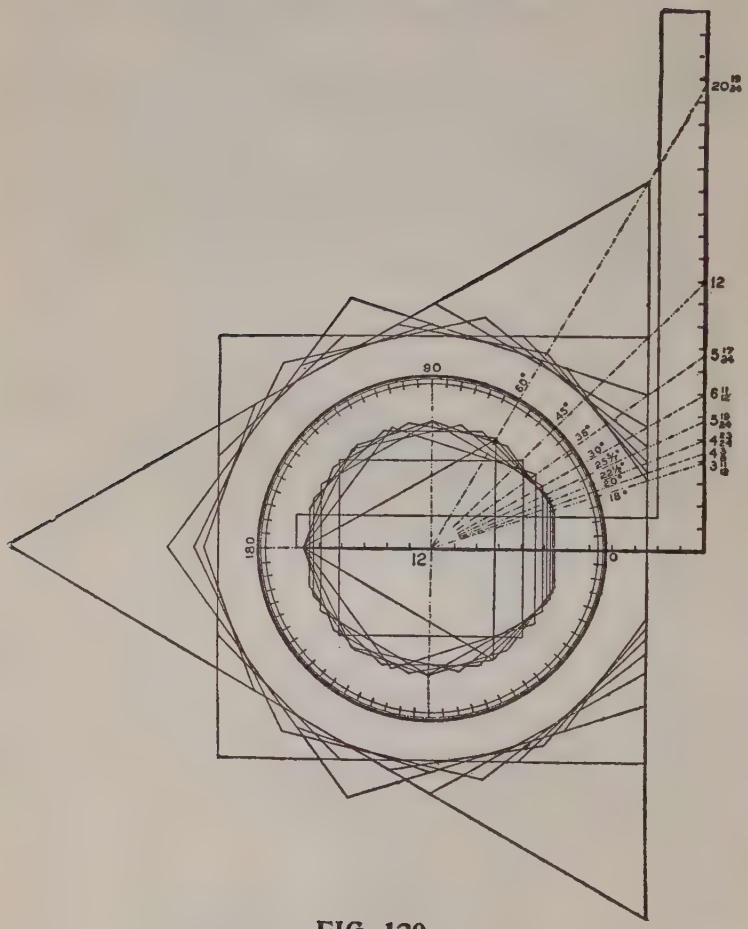

FIG. 120

In Fig. 120 are shown two sets of polygons in connection with the degrees and according to

the scale, the inner set is drawn to a circumscribed diameter of one foot, while the outer set is drawn to an inscribed diameter of nineteen inches. The starting point in either case is at midway of the sides of the polygons, and the more drawn, the more nearly a true circle they will form. In the former, the corners form the circle and in the latter the central part of the sides lends to the shaping of the circle.

In Fig. 121 are shown the polygon circles. In this illustration each polygon has its individual circle. Beginning with the triangle we show the miter lines for eight of the polygons and by squaring up from 6 on the tongue and at the intersections with the miter lines determine the center of the circles. The reader will notice that each circle cuts at three points on the steel square, also notice the dropping down of the circles and the shadows they cast at the two lower points of the steel square. At first glance it might appear that the circles are not true, but a more careful inspection would show that they are as true as can be described with the compass. The descent of these circles from the triangle down to the decagon is quite rapid, but from this on down it would be a very different thing. The miter lines of a polygon having 180 sides would intersect the blade at one degree, or .21 (5-24) which is less than one-fourth of an inch, and would be the length of the sides of the polygon with an inscribed diameter of one foot. The miter line for a polygon having 360 sides would intersect the blade at

.10476. From this it would appear that the continued increase of the sides of a polygon of this size would become too short to be discernible,

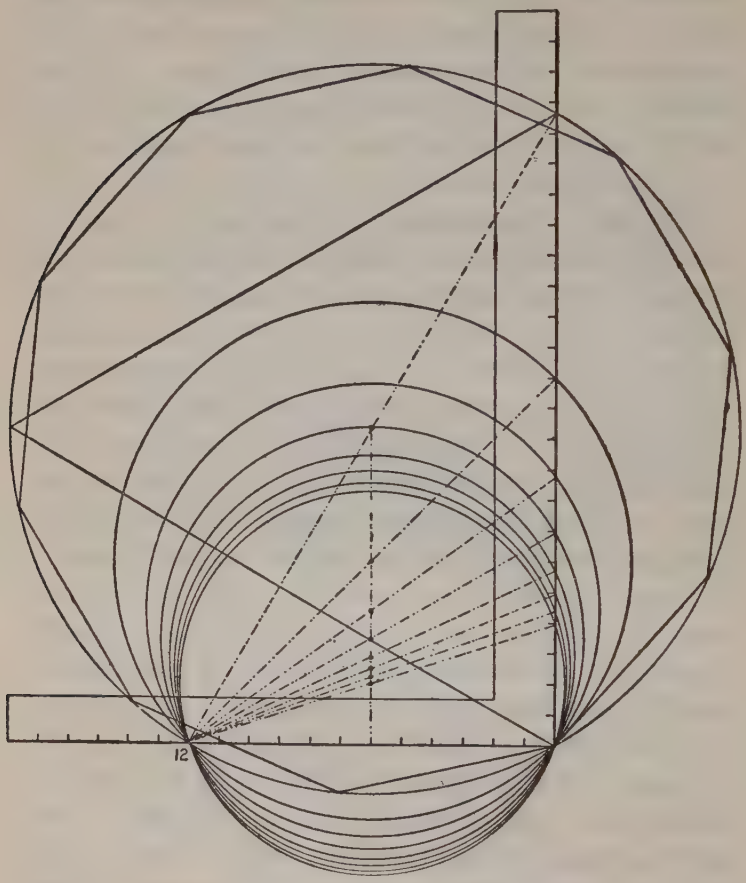

FIG. 121

yet according to trigonometry they could go on and on multiplying in number of sides and the decimal would never be entirely disposed of,

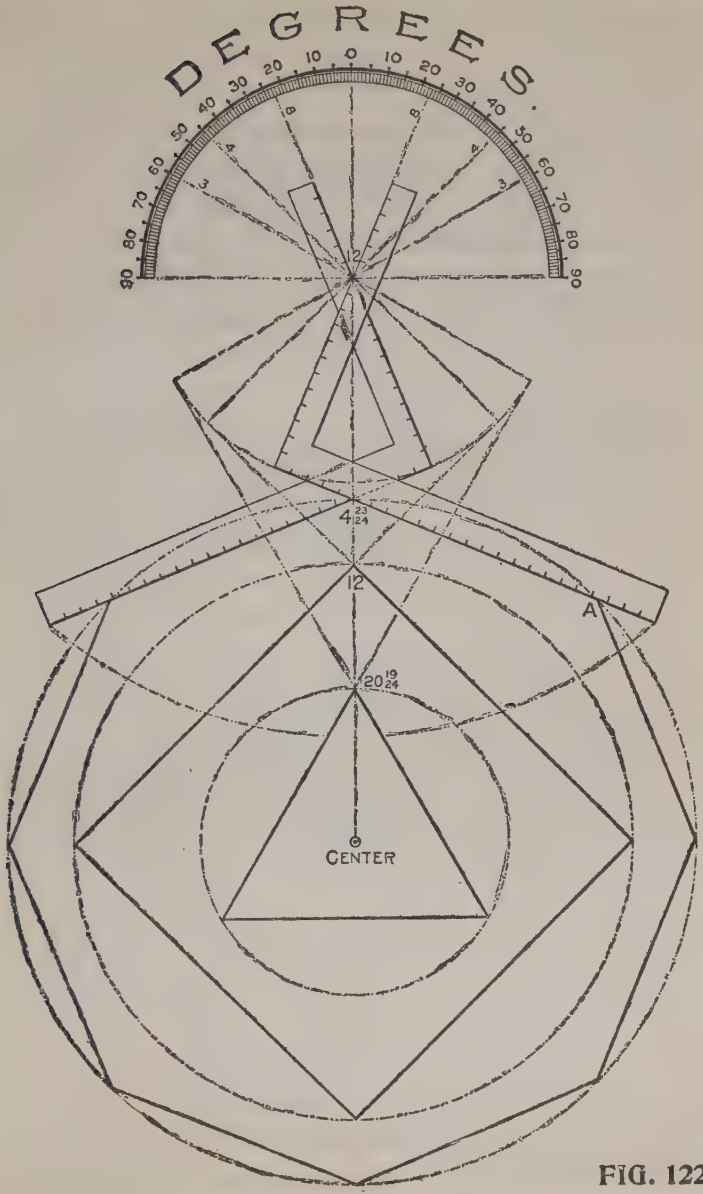
DEGREES.
0 10 20 30 40 50 60 70 80 90
90 80 70 60 50 40 30 20 10 0
12
4 23/24
12
20 19/24
A
CENTER

FIG. 122

leaving it in the infinitesimal or where the polygon really ends and the true circle begins.

In Fig. 122 is shown another way of handling the steel square in laying out the polygons. Here we show two squares as though they were pivoted at 12 on the tongue and made to work like a pair of shears. Just above this is shown the semi-circle with its 180-degree divisions also centering at 12. The degrees are read from the top each way and are to the steel square as the dial to the weighing scales. Thus, to find the side of an octagon, divide 180 by 8, equals $22\frac{1}{2}$. Now swing the blades up until the tongues are in lines with $22\frac{1}{2}$ degrees and the angle formed by the blades will be that of the octagon corner as shown in the illustration, 12 and the figures at the intersection of the blades (4 23-24) will give the required miter. The blade giving the cut. By laying off the desired circumscribed radius on a line directly below the intersection of the blades and where the circle intersects the line of the blade as from 4 23-24 to A will be the length of the desired sides. The quotient for the square, or tetragon, is 45, and that for the triangle is 60 degrees, as shown. For effect in the illustration, we have used one common center for the above polygons. The dotted lines represent the space over which the steel square would travel in laying out these polygons. By using the same center, the pentagon, hexagon and heptagon would come in their order between the tetragon or square and octagon,

and continue on as the number of sides is increased in the polygon.

We have one more illustration along this line we wish to present, as shown in Fig. 123. In this

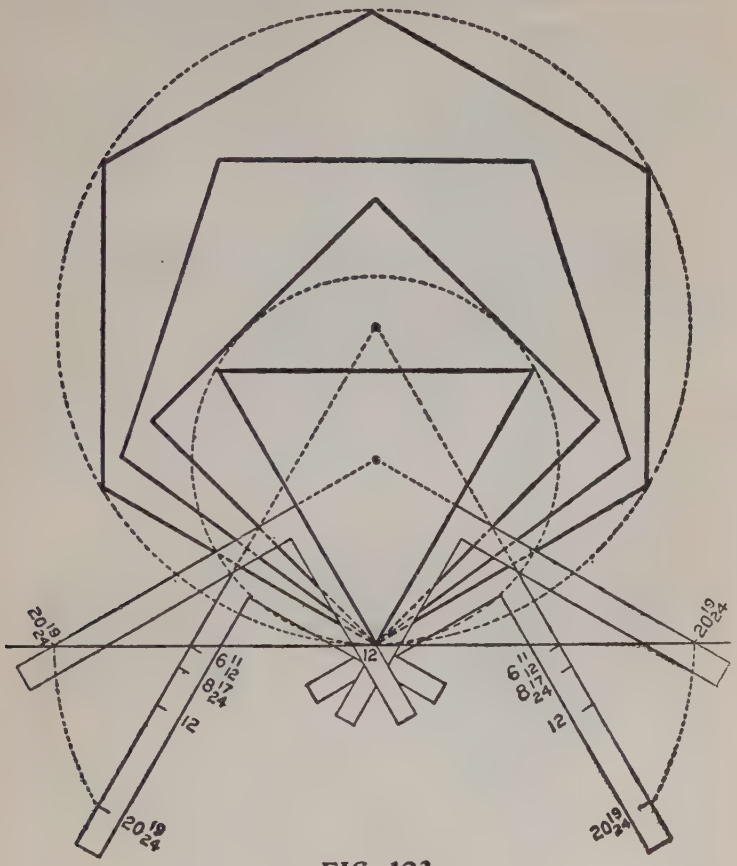

FIG. 123

we show four of the polygons beginning with the triangle and developed with the aid of the steel square from a straight line. The application of

the squares is shown for the triangle and hexagon with the figures given for the square and pentagon. Now just suppose the tongues of the steel square are pivoted at 12 to the line as shown. Now by raising the blade up until the figures on the one that give the miter, intersects the straight line, the angle formed by the tongues will be that of the corresponding polygon. According to the illustration the sides of all of the polygons are 24 inches in length, though they could be by this method laid out to any desired length and by squaring out from the sides at one-half of the desired length and the intersection of these lines will be the center of the desired polygon.

Laying Out a Circular Frame.—In Fig. 124, is shown how any part of a circular frame may be laid out with the aid of the steel square. If we wish to lay out one-sixth of the frame, it may be done as follows:

Lay off the desired radius as from A to B then apply the square with the 12-inch mark at A as shown and draw a line from 12 on the tongue, passing at 6 11-12 inches on the blade and drop to an equal amount on a plumb line below the heel, then that part of the frame as from C to D will represent one of the desired pieces, and by applying the square to the chord line, as shown, will give the required miter. Proceed in like manner for four pieces, using 12 on the blade and the space from E to F will be one of the desired pieces. The space from C to B represents one-twelfth and from E to B, one-eighth of the complete

circle, but since the chords are changed, it requires the figures on the square that give the miters for the respective polygons.

Framing to Any Degree.—In Fig. 125 is shown how to frame to any degree. For an example,

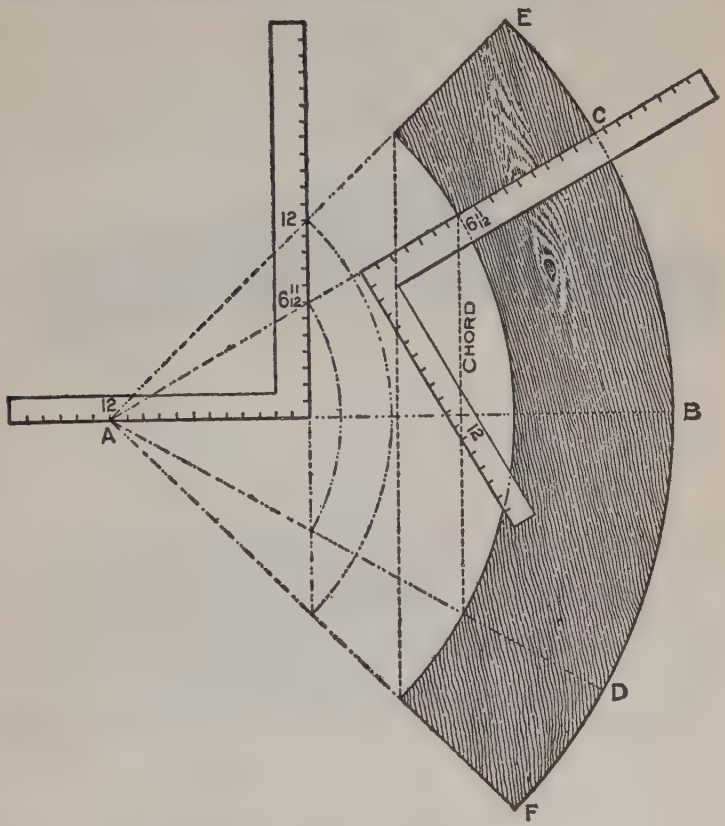

FIG. 124

say we wish to frame two pieces at an angle of 152 degrees. It is evident that the miter should stand at half way between the angle, or at 76

degrees from either side, and 76 degrees from 90 degrees leaves 14 degrees. We find the tangent for 14 degrees to be 2.99 or practically, 3 inches. Therefore, 12 on the tongue and 3 inches on the blade will give the miter, the latter giving the

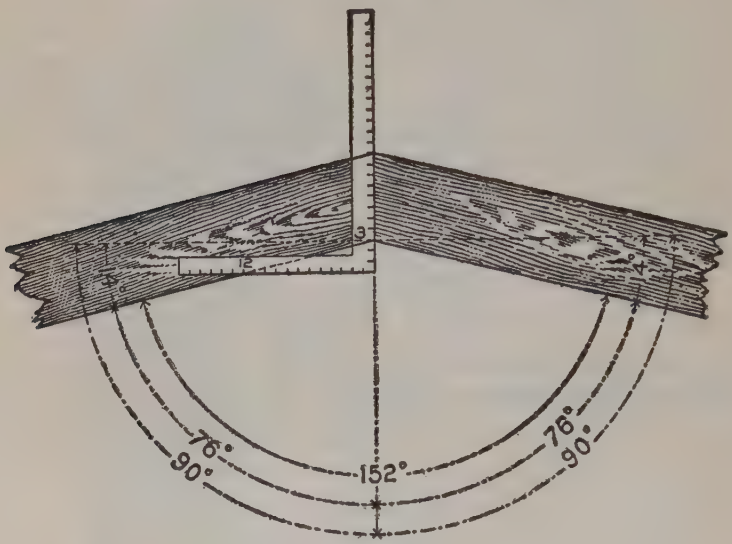

FIG. 125

cut. The square as placed would give the cuts for a brace set to either 14 or 76 degrees.

Ornamental Figures in Miter Work.—We will now call the attention of the reader to a few ornamental figures in miter work that may be accomplished by the aid of the compass and steel square. In this there is a wide field for culture with practically no end. We have prepared for this work a few designs along this line and the mechanically inclined will find in these excellent

practice and if he has an eye for designing, these also will furnish a nucleus upon which to plan other designs that will not only give practice and perfection in handling the steel square, but will help to broaden his knowledge in its use and place him on a higher plane in his chosen profession.

The equilateral triangle is more susceptible of changes in ornamental design than any of the other polygons for the reason that the length of its sides are the radius of the circumscribed diameter of the hexagon. Its area being one-sixth that of the latter, and the same figures used on the steel square for the miter of one also gives it for the other as we have previously shown.

Arrangement of the Triangle.—The triangle can be arranged in many designs or patterns and leave no intervening spaces, as will be seen by

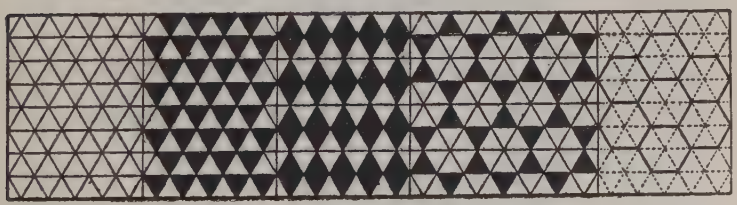

FIG. 126

referring to Fig. 126, which adapts itself to ornamental tile or inlaid work. Even the little honey bee understands the geometric principles in space saving and constructs her store house accordingly in hexagonal cells, which are in the form of six

equilateral triangles and so arranged that they interlock each other as shown in part of the illustration. The equilateral triangle may indeed be classed as the monarch of all the polygons, for within its lines as a basis, any of the other polygons may be drawn to any desired size, as we will show later on under another head.

In Fig. 127, is shown a hexagonal figure in general design and all of the miters can be had on

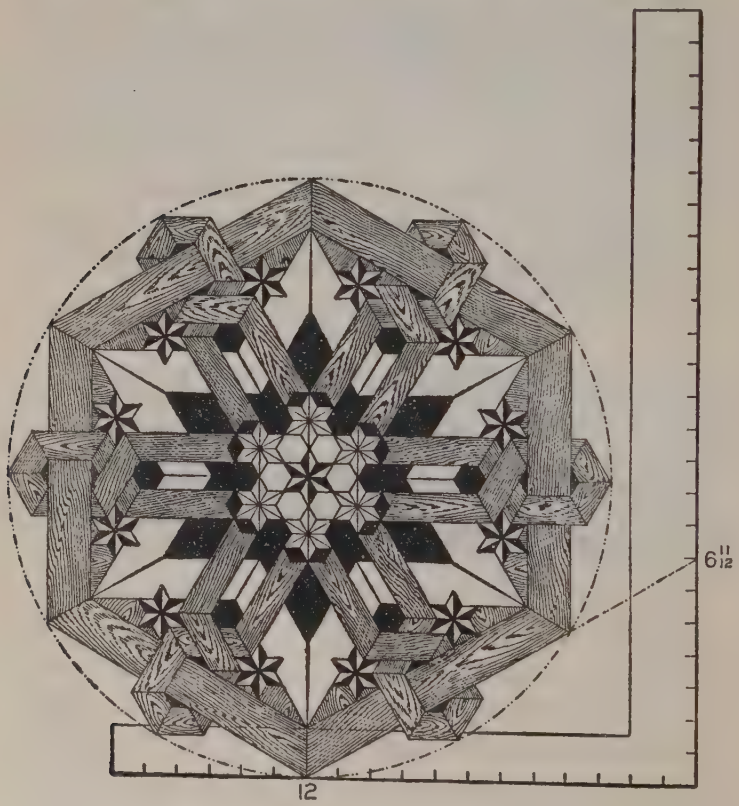

FIG. 127

12 and 6 11-12 as indicated on the square. The blade giving the hexagonal and the tongue the triangular cuts. This proportion, of course, the reader will understand, taken at any other part on the blade and tongue would give the same result, as every fractional part of the divisions on the blade represents a scale, but we will not take the time now to explain. The same cuts exist again at 12 on the tongue and 20 19-24 on the blade, but the cuts on the square are just the reverse.

In Fig. 128 is shown another design and is worked on the same degree lines as in the previous figure; what we said of that figure is just as applicable to this figure. Either of these designs furnish good examples for inlaid work and with care in selection of color of wood would make a very attractive piece of work.

Application of Degrees.—Too much cannot be said as to the possibilities that come in range of the common steel square in connection with the degrees contained in the eighth part of a circle as applied to the right-angle triangle and their tangents. For they cover the whole field of miters whether on a level or incline plane. The illustrations that we have been giving pertain to the miters resting at a level plane, but they form the basis for miters resting at an inclined plane, which pertain to the side cuts of rafters for any shaped building, the working out of geometrical hand railing, etc.

In Fig. 129 are shown three hexagonal star-

shaped frames inclosed in circles and these are contained in one large hexagon and the whole in one large circle.

The reader will notice that the figures given on the square are the same as those given in previous illustrations for the miter of the hexagon.

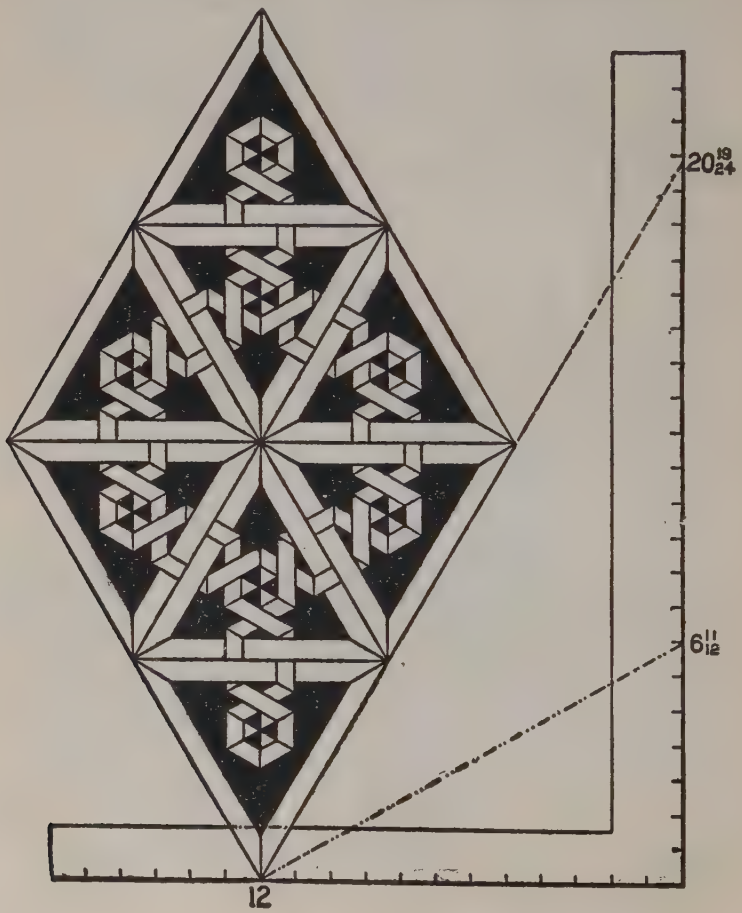

FIG. 128

The blade will give the angle for the inner points, while the tongue will give it for the outer points, or if 60 degrees is used, which falls at 20 19-24 on the blade, then the angles will be just the reverse on the square.

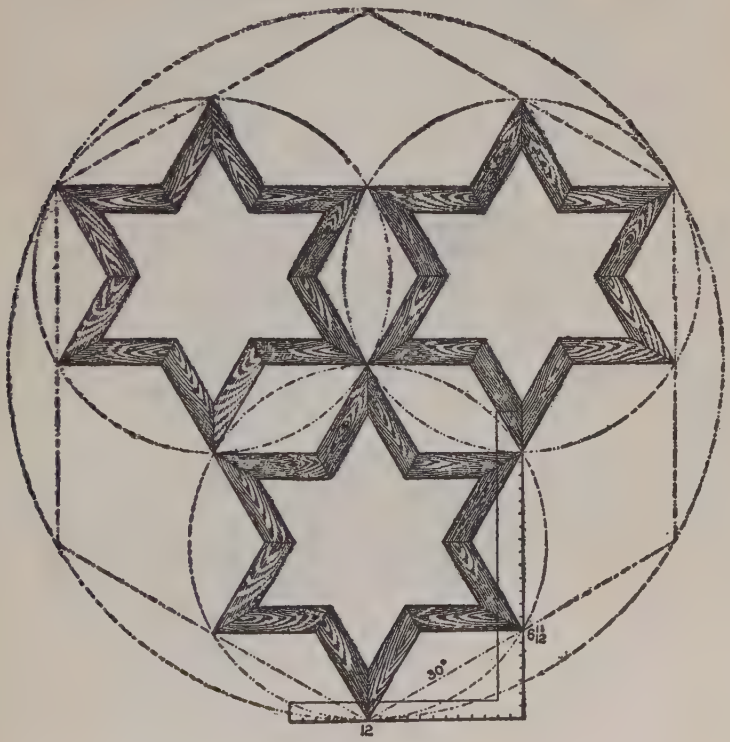

FIG. 129

In Fig. 130 are shown six squares laid in pairs with their blades and tongues intersecting each other at the figures that give the hexagon miter, and produces one of the most beautiful examples

in miter work. All of the angles about the squares form some part of the hexagon and it will be seen that the large circle that incloses the figure is equally divided into six parts.

In Fig. 131 is shown another form of drawing polygonal figures. In this we show two squares,

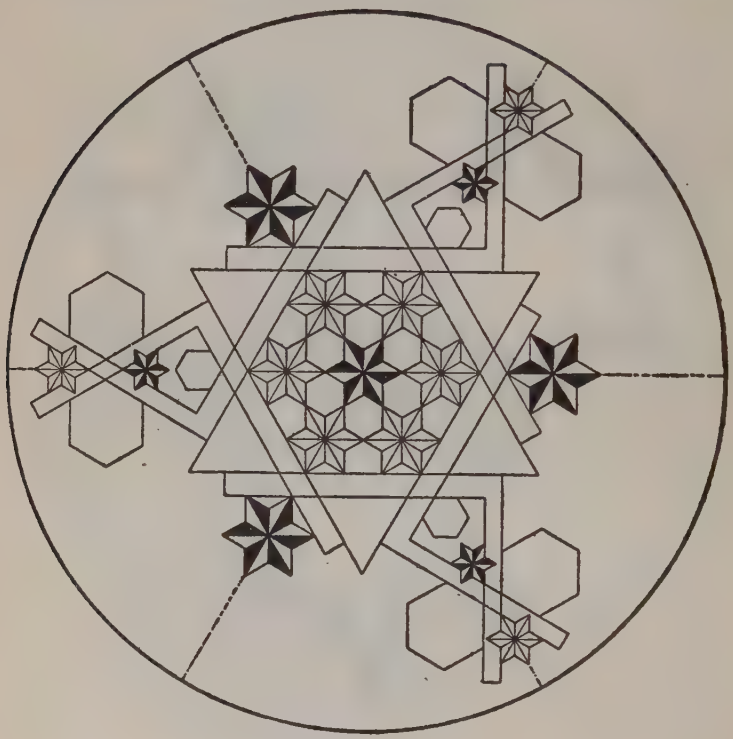

FIG. 130

though only one is needed. The second one is given for effect in balancing the drawing, as it will be seen that the same figures are used on both squares. The degree lines leave the 12 on the

tongues at 15 degrees apart and intersect the figures on the blade as shown. Now since 15 is a multiple of the number of degrees that form several of the polygons, they are contained in

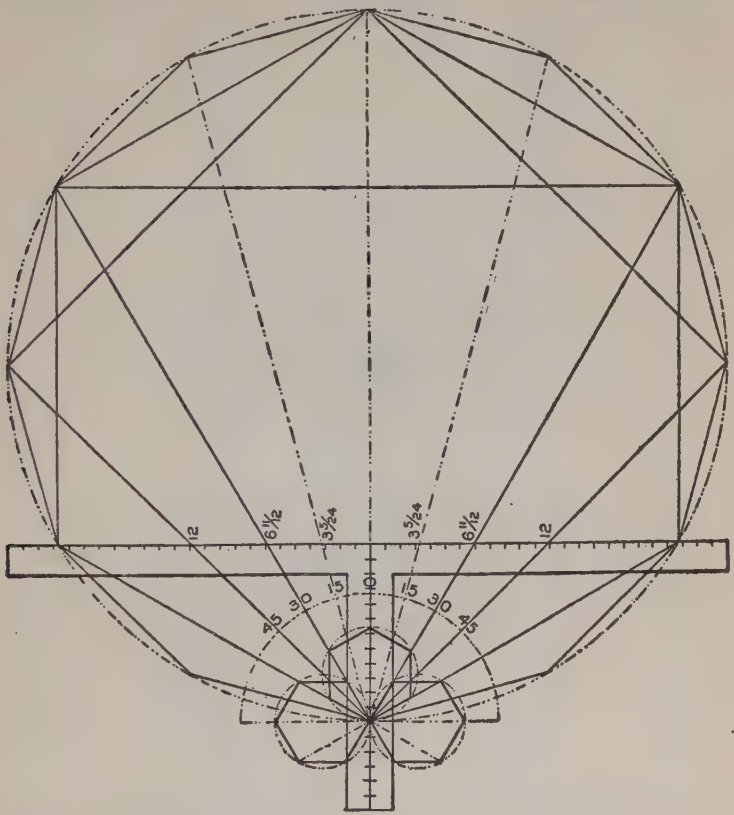

FIG. 131

this figure, as 15 is contained in 180 twelve times, 30 is contained six times, 45 is contained four times and 60 is contained three times. By referring to the illustration the reader will see that

polygons of the above number of sides are all contained in this figure.

In Fig. 132 we have carried the above a little further, showing the same polygons as in the pre-

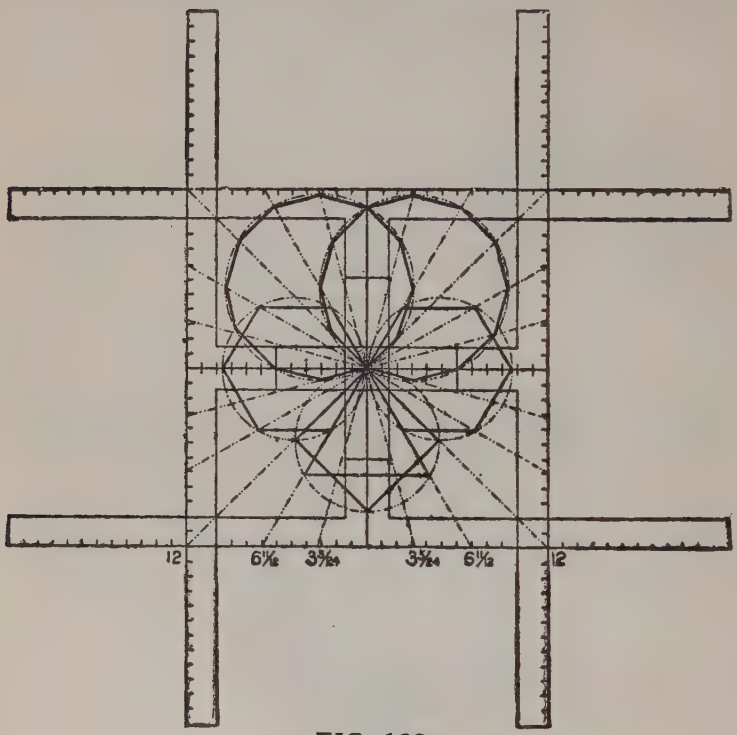

FIG. 132

ceding figure, but in this case they have blossomed out into a flower.

In Fig. 133 is shown a diagram whereby the angles and dimensions for any of the polygons may be accurately drawn by a system of lines passing through 12 on the tongue of the square.

For illustration we have taken the heptagon or seven-sided figure.

The semi-circle 7-A is first drawn, which may be to any desired size. Place the steel square as shown with the 12-inch mark at the center.

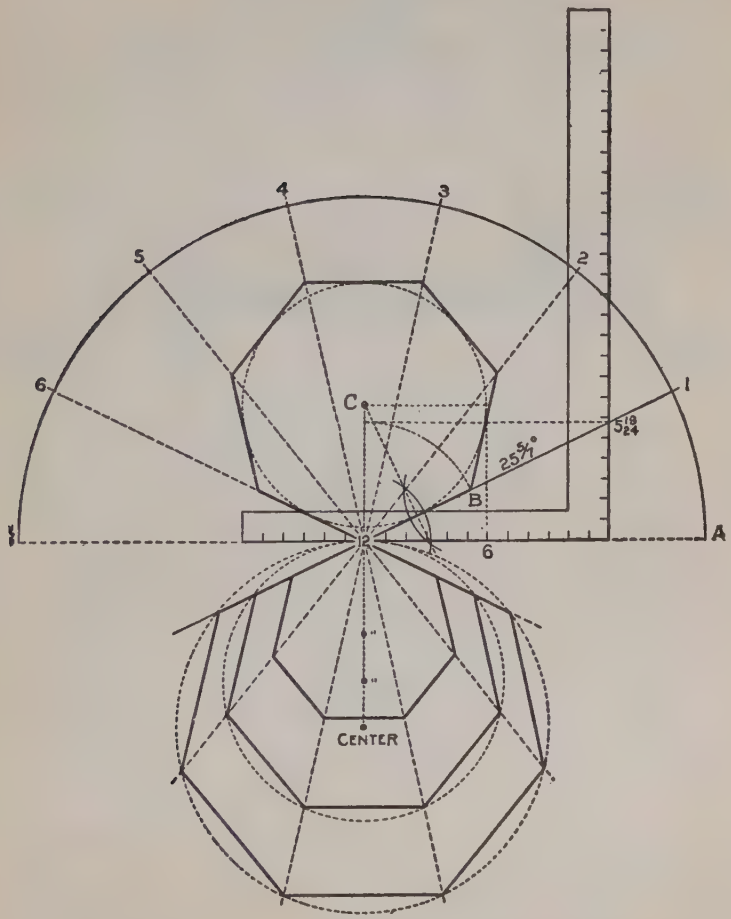

FIG. 133

Then draw a line from 12, passing at 5 19-24 on the blade (which are the figures to use for the miter), and continue on, intersecting the semi-circle at 1. Then A-1 will represent one-seventh of the semi-circle and is equal to the spacing set off at 1, 2, 3, etc. Draw lines from these points to the center at 12, as shown.

Drawing a Heptagon.—Now, suppose we wish to draw a heptagon with a twelve-inch inscribed diameter. Set off 5 19-24 on the line 12-1, as at B, and bisect the line 12-B as shown, and where the bisecting line intersects the perpendicular line from 12, as at C, will be the center from which to strike the required radius.

By indefinitely extending the lines 1, 2, 3, etc., below 12, as shown, heptagons with any desired circumscribed radius may be readily determined by simply setting off the radius on the perpendicular line as shown, and where the circle cuts the extended lines determines the length of their chords or sides. In the illustration we have shown three sizes. Proceed in like manner for any of the other polygons, but using the figures on the blade of the square that give their miters.

In Fig. 134 we show two squares with the blades and tongue intersecting at the figures that give the pentagon miter, and as will be seen, all of the angles form part of the pentagon. The stars are shown in connection with the same to further illustrate the accuracy of the illustration.

In Fig. 135 the lines are at 18 degrees on the square at the lower point of the star, and as will

be seen, gives the miter for a frame star shape, the tongue giving the angle. From this it will be seen that the tongues of these squares are in a

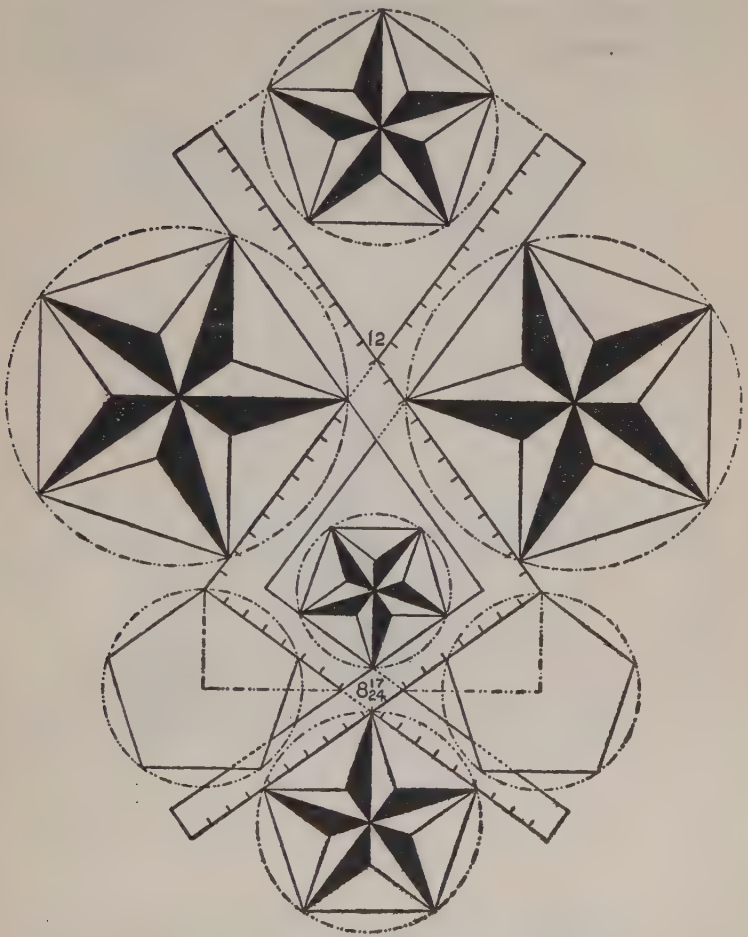

FIG. 134

direct line with the center of the star. The squares at the top are set at 36 degrees, with

their tongues in line with the 18 degree lines from the two lower squares, and form the angles for other parts of the star.

It will be seen that a star-shaped figure can be systematically framed either in the solid or in

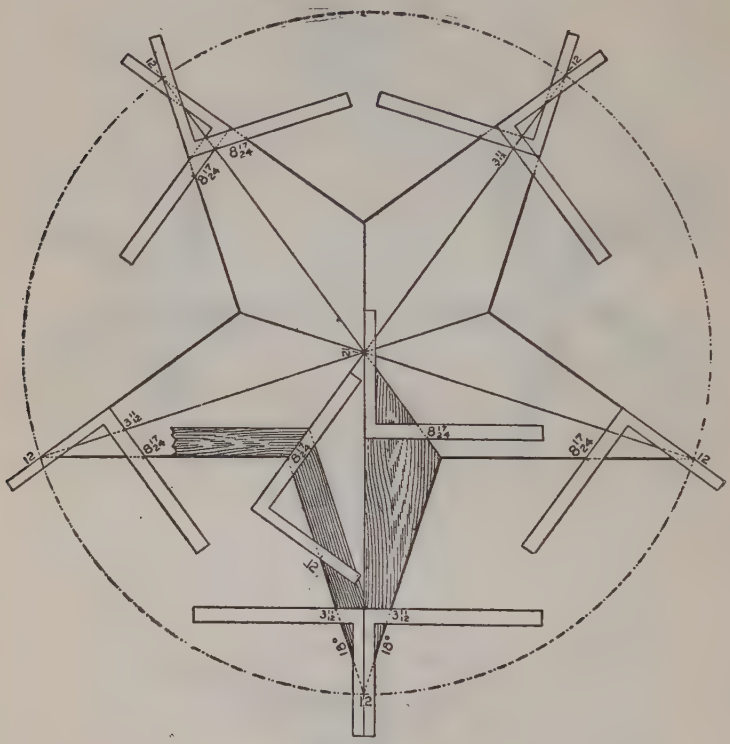

FIG. 135

part, as shown, and that without first laying out a full-sized diagram, and the ten pieces will fit to their respective places. The figures 12 and 8 17-24 also furnish the basis for framing a root of

this shape, and the general rule that applies to this, applies to all angles.

Tangents and Co-Tangents.—In Fig. 136 we have tried to make the subject of tangents and co-tangents clear by the use of two steel squares,

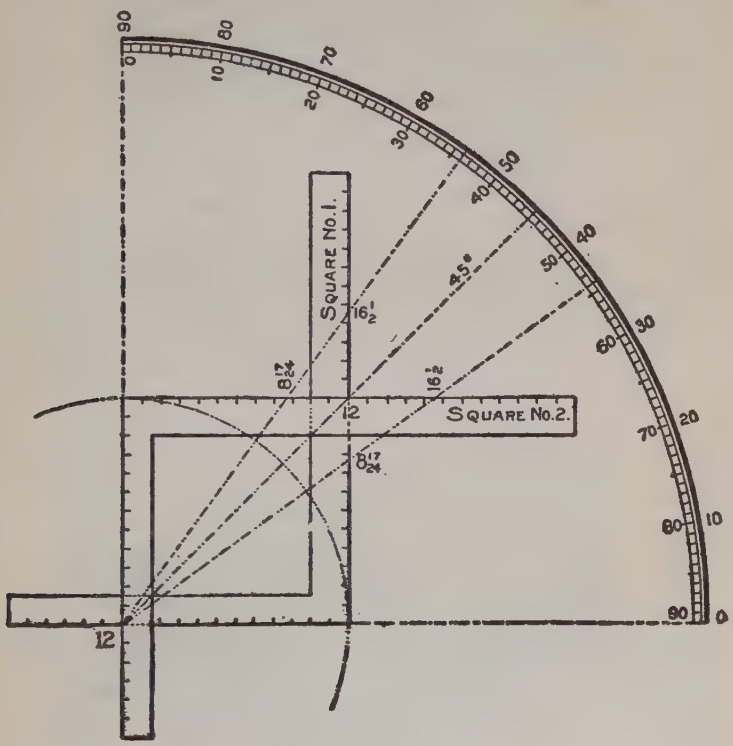

FIG. 136

placed as shown in connection with the quadrant. The blades and tongues intersecting at 12 and 12. Now, since a tangent is simply a straight line touching the side of a circle, we let the blades represent the straight lines intersecting a circle

described from 12 on the tongue. Reading from the bottom up, the 36-degree line passes at 8.72 (8 17-24 inches) on the blade of square No. 1, and from this back to the heel is the tangent. Now, referring to square No. 2, what was 36 degrees

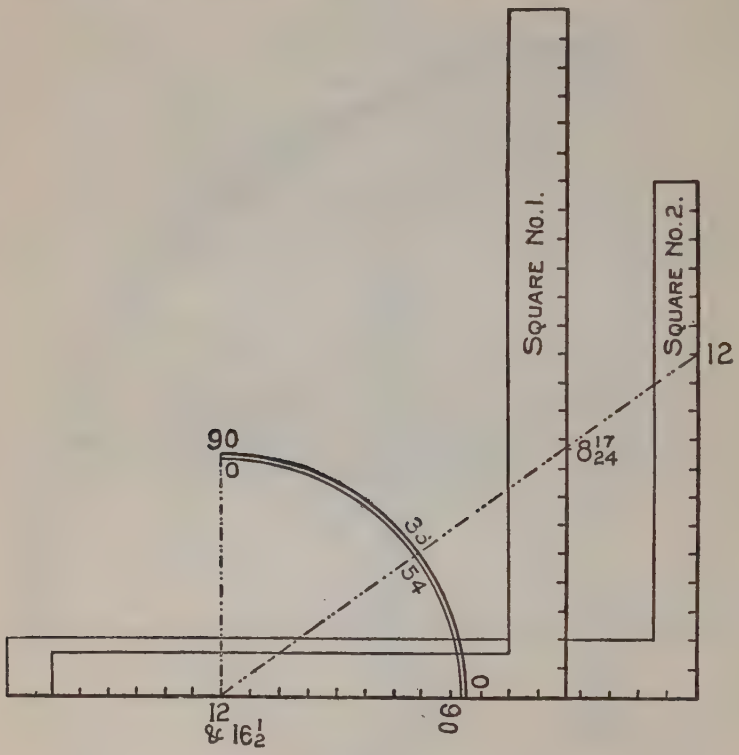

FIG. 137

on square No. 1 is 54 degrees, and passes at 16.51 ($16\frac{1}{2}$ inches), and from this point back to the heel is the co-tangent. Both squares give identically the same cut, in other words, what the

tongue gives in one, the blade gives in the other. If we read the degrees from the top to the right, we have the same thing, only reversed on the square.

The 45-degree line, being at the half-way place on the square, remains unchanged. To illustrate this point a little further, we show two squares in a different position, as shown in Fig. 137,

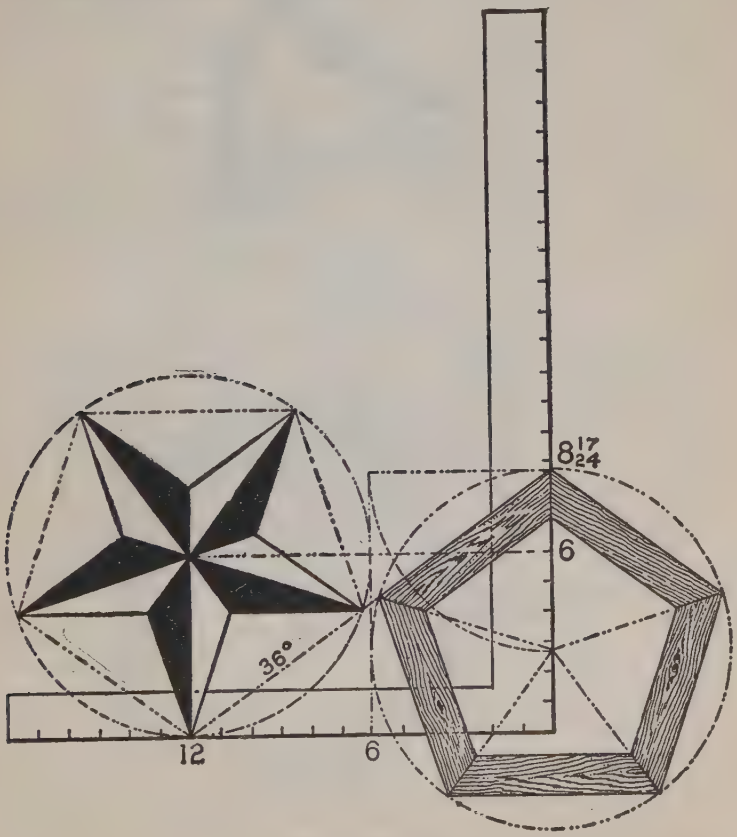

FIG. 138

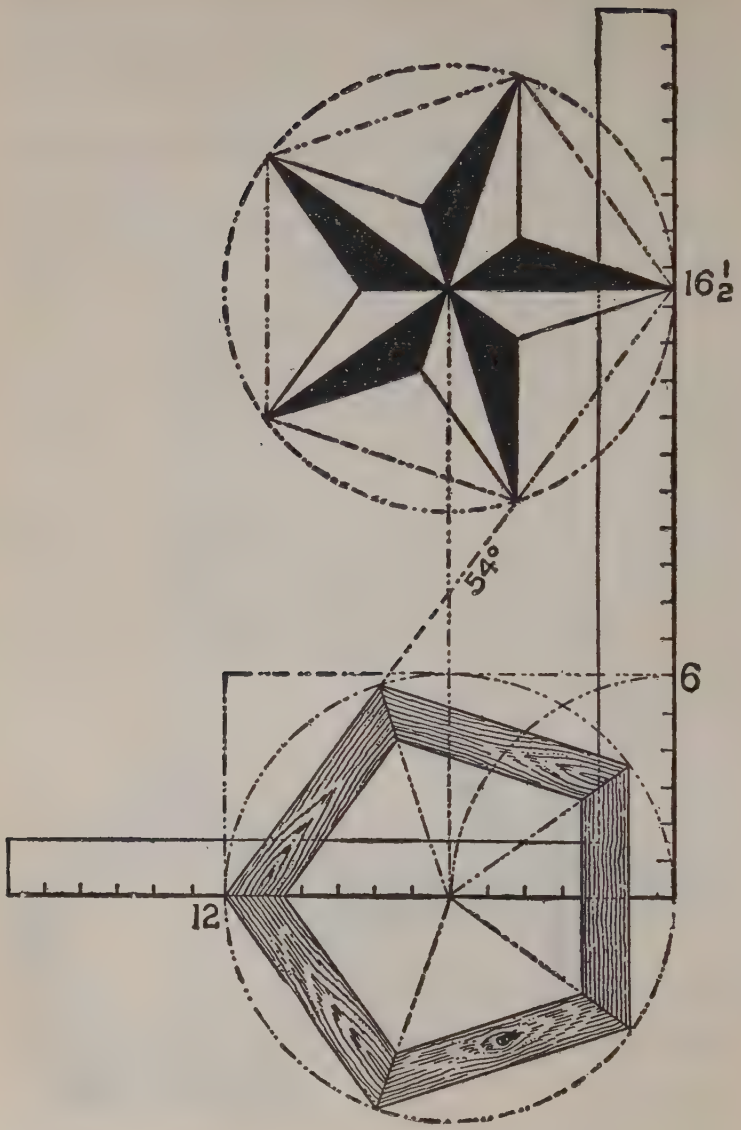

FIG. 139

using the same figures on the squares as in Fig. 136 for the 36 and 54-degree line. Taking the squares separately, we show in Fig. 138, using the 36-degree line, the pentagon miter on the blade and the pentagon star resting at 12 on the tongue; while in Fig. 139, using the 54-degree line, the

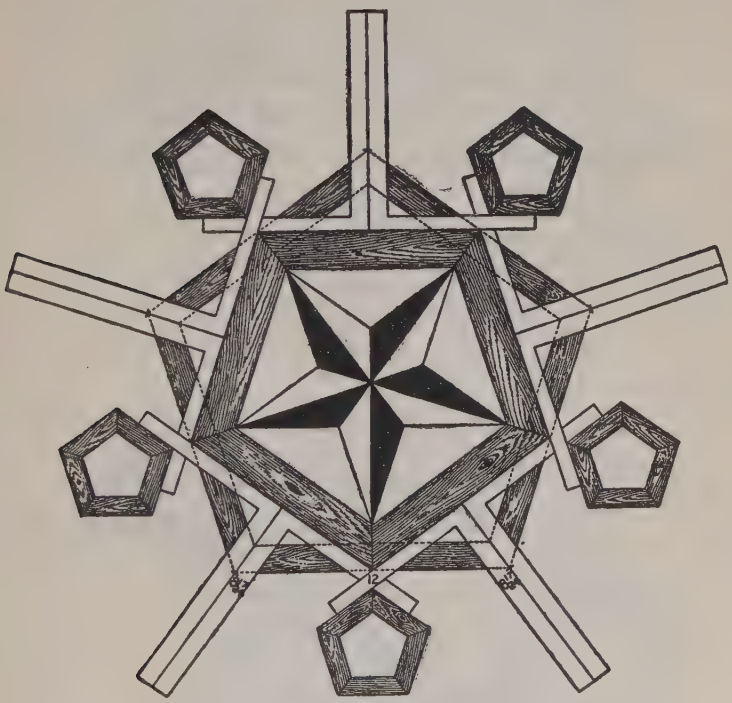

FIG. 140

reverse is shown. In both of these illustrations the pentagon frame and star are inclosed in a circumscribed diameter of 12 inches, but they could be of any desired size.

We have one more pentagonal illustration as

shown in Fig. 140, we wish to present before passing on to some of the other polygons. We could go on and show other positions of the steel square in forming the pentagon and its miters, but the figures used on the steel square would conform to the figures here given or to their ratio. We will now call the reader's attention to some of the other polygonal figures, applying the same rule as for the pentagon or five-sided figure.

Degree Line of Triangle and Hexagon.—The triangle and hexagon are the only polygons whose

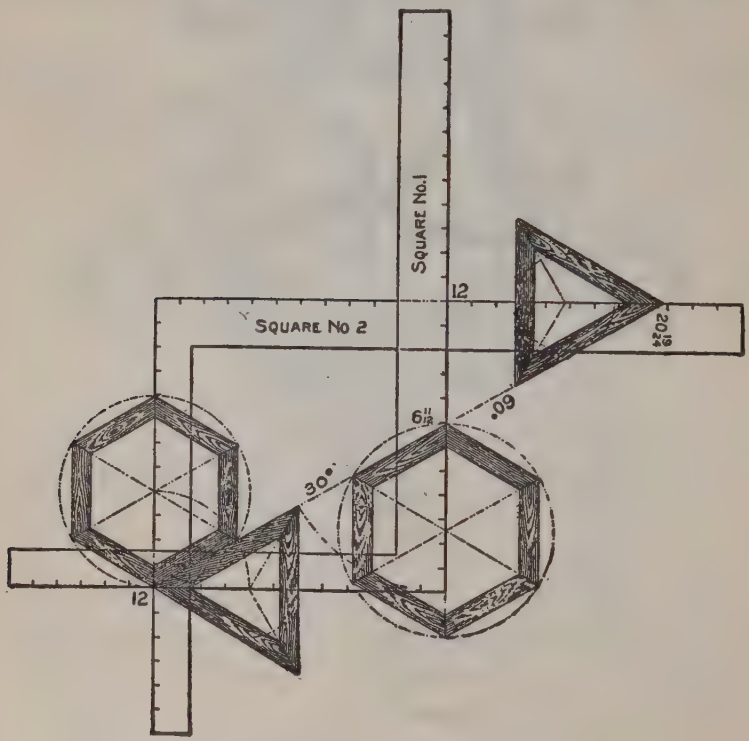

FIG. 141

miters can be had on the same degree line, which permits of using the same figures on the square as shown in Fig. 141. In this, we show two squares with but one degree line, which is 30 degrees on the square No. 1 and 60 degrees on square

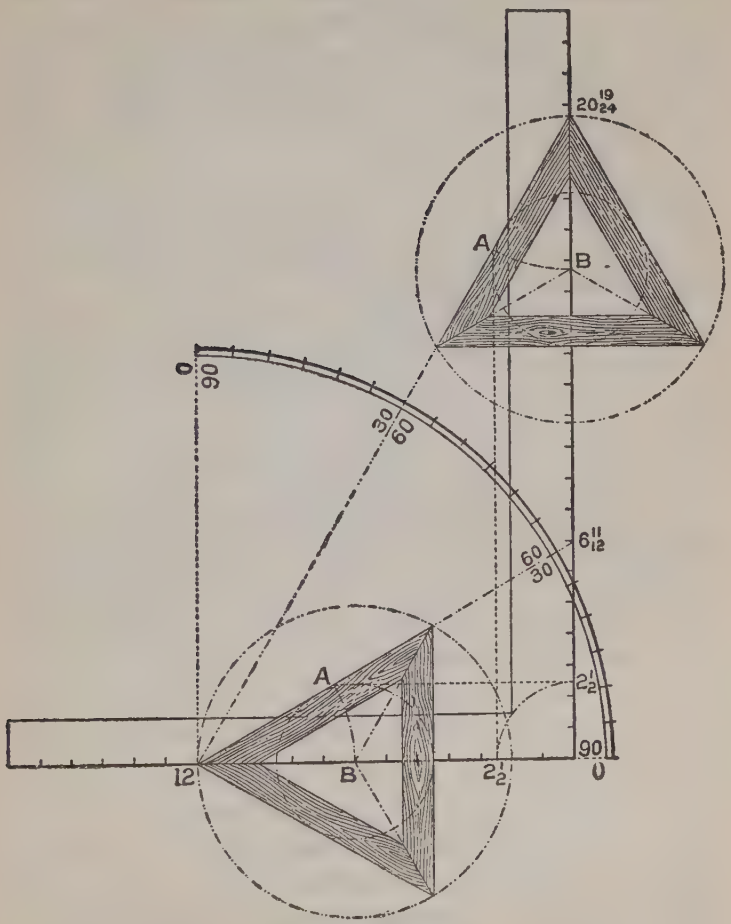

FIG. 142

No. 2 and both giving the same cuts but reversed on the squares. Perhaps this point could be made more clear by using but one square as shown in Fig. 142. In this, the degree lines are shown for the 30 and 60 degrees and both giving the miter for the triangle. The tongue giving it in the former and the blade in the latter. In this example, we show how to lay off a triangle of any inscribed diameter by setting off the radius, say $2\frac{1}{2}$ inches on the blade as shown, and squaring out to the degree line as at "A." Then with the length from 12 to "A," set off on the tongue will locate the center as at "B," or vice versa if the cut is wanted on the blade.

In Fig. 143, we show a circle with the degree divisions spaced on same with the aid of the steel square. We do not claim this to be the best way, nor would we use this method if we had a job of this kind to do, but it can be done and that very accurately, by letting 12 on the tongue rest at the center and checking on the blade as follows: $2\frac{1}{8}$, $4\frac{3}{8}$, 6 11-12, 10 1-12, 14 7-24 and 20 19-24 inches, which places the degree lines ten degrees apart. Then swing the square till the tongue rests in line over the last check and repeat the markings. Six movements of the square will complete the divisions and with a straight edge, which may be the blade of the square passing from the center and over the check marks, will divide the circle in divisions of ten degrees, and these may be divided with a compass into ten spaces, designating the degrees. Of course, the whole circle could have

been divided with the compass by first dividing the circle into quarters or sixths and these spaces again into the required divisions, but the reader will understand that we are illustrating what may be done with the aid of the steel square. How-

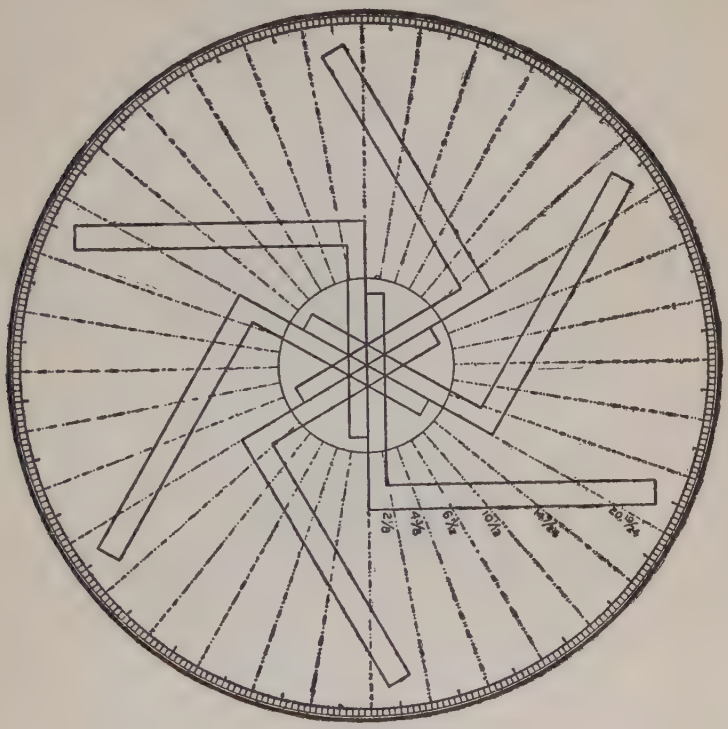

FIG. 143

ever, it will not be out of place to show what may be done with the compasses alone in laying off the degrees on the circle as shown in Fig. 144, and may be drawn as follows:

Laying Off Degrees With Compasses.—With the compass describe the degree circle and without changing the radius, set the needle point at any place on the circle, describe another circle and at the intersection with the first circle, describe

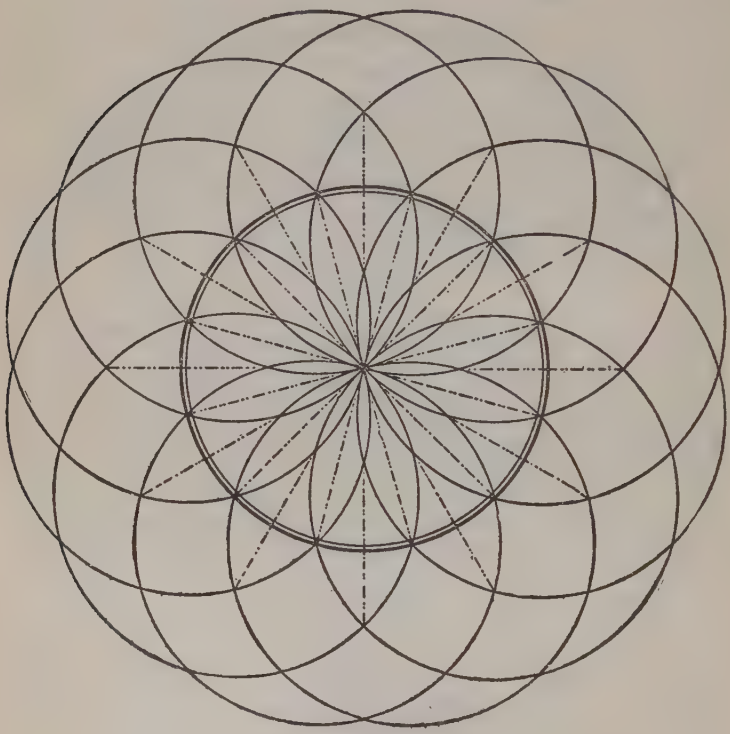

FIG. 144

another circle and continue until all of the intersections have been used; then with a straight edge lay off the lines through the center to the intersection of the points of the outer circles. It will be seen that the degree circle has been

divided into twenty-four equal divisions or 15 degrees apart. These divisions could be again divided in like manner down to 5 degrees by setting the needle point at one-third of the space on the circle and thereafter on the intersections as described above.

Index to Volume 1

	PAGE
Acute roofs, rafters for	43
Adjustable fence	33
Affixing stair strings	166
A formula in figures	79
Angle block in position	157
Angles and bevels for hopper work	128
Angles formed by division of circle	94
Angles in regular and irregular miters	136
An unequal pitch	74
Application of the fence	34
Application of degrees	223
Application of steel square to trusses	146
Arrangement of the triangle	221
Backed hips	92
Balusters for stairs	168
Bed moulds for gable, to cut	81
Beveling of hip rafter	81
Bevels of hips and jacks	101
Bevels for top of vertical boarding	46
Bevels in octagon roofs	101
Bevels of purlins, how to find	90
Board measure	28
Board, plank and scantling measure	27
Board rule	28
Brace, how to make pattern for	35
Brace rule explained	29

PAGE
Brackets for stairs 168
Butt-joint, to find cut for..... 123

Care required in selecting a square 22
Circle with degree divisions 240
Circular roof, how to pierce with saddle roof . 87
Circumferenec of the circle 132
Collar ties, to find bevel for 46
Combination squares 181
Common difference in length of jacks 190
Common rafters.....48–63
Compasses, uses and importance of 30
Complement pitch..... 140
Connecting stair strings 166
Co-pitch 138
Corners, classes of 135
Cornice, projecting..... 52
Co-tangents 233
Cove moulding..... 159
Cripple jacks 101
Curved hip rafters..... 61
Curve for octagon hip 205
Cuts and bevels 46
Cuts and bevels for flaring hopper 125

Decimal equivalents..... 91
Degree framing..... 91
Degree line of triangle and hexagon 238
Degrees, subject of 187
Description of the square 21
Definition of pitch 48

PAGE
Diagonal scale 24
Diagram illustrating roof pitches 91
Diagram of brace in position 38
Diagram of hip and common rafters in place. 68
Diagram of hopper in different views 121
Diagrams of hopper roofs 117
Diagrams of plan of roof 40–50
Diagram of scale enlarged and lettered 24
Diagram of side cut of hip or valley..... 70
Diagram of side cut of jack..... 70
Diagram of tower for windmill 150
Diagrams of various classes of hoppers 117
Different kinds of jacks described..... 111
Dividers, taking distance with..... 62
Divisions of the circle..... 94
Drawings, scale to measure 23
Drawing a heptagon 230
Drawing a five-pointed star 201
Drawing polygonal figures 226

Earliest builders 19
Elevation and plan of hoppers. 119
Ends of hopper, to find bevels and width of . 121
Explanation of angles in miters 130
Explanation of scales on steel square 23

Finding the bevels of purlins 90
Finish of wall string 170
Flaring hoppers, cuts and bevels for 125
Foot run for hips and valleys 66
Formation of a brace 35

PAGE
Fractional pitch lines 92
Fractions, pitches and..... 43
Framing timbers 202
Framing a roof 192
Framing to any degree..... 219
Framing by degrees 95

Gable, to get length of valley rafter for 59
Gauge or fence on pitch-board 156
Gauge line, how made 156
General rules for using square 43
Greeks not the inventors of the square 19

Height and run of stairs 154
Hexagonal roofs 112
Hight's union combination square 183
Hip or valley for octagon building..... 49
Hip and valley roofs..... 63
Hip rafters 55–61
Hip roof framing..... 79
Historical and descriptive 19
Hoppers and hopper bevels 116
Housed or closed strings 161
How to cut jack rafters 68
How to cut planceer 81
How to determine the height and run..... 153
How to find cuts and bevels of trusses 146
How to find lengths of rafters 97
How to find miter 132
How to find the shoulder of purlins..... 85
How to get the bevels 46

PAGE
How to lay off octagons 31
How to lay out hopper bevels 116
How to lay out rafters 40
How to make a miter box 175
How to make a pitch-board 155
How to obtain pitch of tower roof 54
How to pierce a circular roof with a saddle roof 87
How to test the square 22

Ideal bevel try square 184
Illustration of roof pitches 90
Illustration of side cut of jack 71
Illustrations of stairs 165–167
Illustrations of the pitch-board 156
Irregular braces, lengths and bevels of 38
Irregular miters 136
Irregular, uneven or unequal pitches..... 50

Jack rafters, how to cut..... 70
Jacks of different kinds described..... 41
Jack, side cut of, illustrated..... 70
Jacks, to find length of..... 54
Joints in hopper work 116

Keeping the old squares 21
Key to the steel square..... 187
Knowledge, open ways to..... 15

Laying off degrees with compasses 242
Laying off octagons 31
Laying out a circular frame 218

PAGE
Laying out hopper bevels 116
Laying out of rafters 41
Lengths and bevels of irregular braces..... 38
Lengths and bevels of hips and jacks..... 101
Lengths and bevels or cuts of rafters 46
Lengths and cuts for one-third pitch..... 189
Length of common rafter 48–63
Length of hip rafter 56–57
Length of rafters, how to find 53–63
Lengths of jacks, how to find 54
Lines on square explained 23
Lip on upper edge of riser 160

Making a pentagon frame..... 199
Manner of using pitch-board 156
Measurement line of hips and valleys..... 67
Measurements of the square..... 26
Methods of finding the miter 132
Methods of laying out rafters 41
Methods of making stair strings 161
Minute measurements 24
Miter boxes 174
Miter cuts for hoppers..... 118
Miter cut for raking mould 179
Miter for any regular polygon..... 196
Miter, how to cut to fit hip 76
Miter joint, to find cut for..... 118
Miters..... 130
Moulding for stairs 170
Moulding or "cove," how used 159

Necessary appendage to the square 33

PAGE
Newel post of stairs 172
New squares in use 22
Nosing finish 169

Octagonal roofs 98
Octagonal scale explained 30
Octagon hip 68
Octagon jack, side cut of 70
Octagons, how to lay off..... 31
Old squares sufficient 21
Open stair strings 158
Open string stairs, view of 172
Open ways to knowledge 15
Origin of the square..... 19
Ornamental figures in miter work 220

Pattern for brace 35
Pentagon, or five-sided hopper 143
Pitch-board, how to make 155
Pitch of tower roof 54
Pitches and fractions..... 43
Pitches, illustrations of 91
Pitches of roofs 47
Pitches, reversed 49
Pitches, unequal..... 74
Pitch reckoned by degrees..... 91
Planceer cuts 81
Plank measure 27
Plan of a hip and common rafter in place.... 68
Plan of rafter 67
Plan of tower for windmill 149

PAGE
Plans of hoppers 117
Plumb cut of rafter 42
Polygon family circle 209
Possibilities of the steel square 209
Prehistoric tools 19
Preliminary 15
Principles of hip roof framing 83
Principles of the diagonal scale 25
Projecting cornice 52
Purlins, to find bevels of 90
Purlins, to find shoulders of 85

Quick methods of finding hopper cuts 117
Quick methods of finding miter 138
Quick method of finding pitch 91

Rafters, laying out of 40–41
Rafters for acute roofs 43
Rafters, to find length of 53–63
Rafters, to find seat and plump cuts of 66
Rafter tables, etc 27–188
Reckoning by degrees 94
Regular miters 136
Requisites of the square 22
Return roof of a veranda 63
Reversed pitches 49
Revolving disk, the 188
Risers and treads 157
Riser shown in position 157
Roof drawing, use of square on 43
Roof for tower 54

PAGE
Roof framing 40
Roof, to timber a hexagon 115
Roof pitches explained..... 47
Rough stair strings 165
Rule for finding bevels for butt joint of hopper. 125
Rule for laying off octagons 31
Run of hip or valley, to find 59
Run of stairs, to determine 155

Saddle roofs..... 87
Scales on square explained 23
Scantling measure 27
Section of a raking mould 176
Shape and hip of rafters..... 63
Seat and plumb cuts of rafters..... 66
Shoulders of purlins, to find..... 85
Side cut of the hip..... 80
Side cut of hip and valley illustrated.....80–191
Side cut of jack illustrated.....70–191
Side cut of octagon jack..... 191
Special features of new squares..... 27
Square hoppers..... 117
Square, how to test and true..... 22
Squares of inferior grade in use..... 32
Square used by earliest builders..... 19
Stair building..... 153
Stairs, illustrations of.....165–167
Steel square, uses of.....17–43
Steep roofs, how to frame..... 43
Strings, showing cuts for treads and risers.. 155
Subject of degrees..... 187

PAGE
Table of decimal equivalents 95
Table of tangents 191
Tangents and co-tangents 233
Testing a square 22
The finished workman 16
To cut bed moulds for gable 81
To cut common rafter 80
To cut planceer to run up valley 81
To find backing for a curved hip 61
To find backing of a hip rafter 83
To find bevels and width of hopper 118
To find bevels for butt joint of hopper 125
To find bevels for flared sides of hopper 126
To find cut for a butt joint 125
To find length of rafters where risers are of different height 53
To find shape of jack 208
To find the length of jacks 78
To timber a hexagon roof 115
To obtain length of various rafters for any width of building 106
Tools of prehistoric origin 19
Tower for windmill, etc 149
Tower roof, to obtain pitch of 54
Tread and riser, scheme for 161
Trusses, to obtain cuts and bevels of 146

Unequal pitches 74
Uneven pitches 50
Universal Square 183
Use of octagonal scale 31

PAGE
Use of square in following a roof drawing... 43
Use of the figures, lines and scales..... 23
Uses of the steel square..... 17

Valley rafter for gable..... 59
Valleys and hips..... 63
Valley, side cut of..... 70
Valleys, foot run for..... 71
Various views of hoppers..... 128

Wall string, finish of..... 170
What is needed to excel..... 14
Width of end of hopper..... 121
Windmill, diagram of tower for..... 149
Woods' illustration of roof pitches..... 91
Woods' Key to Steel Square..... 187

PART II

CONTENTS

Part I

MISCELLANEOUS RULES. Measurement — To find number of yards of plastering or painting — To divide a board into equal parts — To obtain diagonal of parallelogram — To find circumference of a circle — To find side of greatest square in a circle — To determine proportions of cylindrical bodies — To determine center of a circle — To find square of equal area to a given circle — To obtain circumference of circle of given diameter — Method of dividing angles — To form a template or set square — To describe a circle with aid of steel square — How square may be used to form ellipses — To describe a parabola — To determine what weight is required to balance lever — To form a semi-circular groove — To cut for pitched covers — To lay off a miter or equal joint — To find length of braces and other timbers — To produce an octagon — To make a hexagon — Construction of a pentagon — To obtain a heptagon — To obtain correct shape of a veneer — Proportional scales — To reduce from one scale to another..... 11

Part II

POLYGONS AND MITERS. Polygons inscribed in circles — Foundation of miters — Fractional value of decimals — Polygonal figures — Side of polygon being known to find length of perpendicular — To divide a circle into a given number of parts — To measure inaccessible distances by aid of the square

— To find the distance across a body of water — To find the height of a tree — To find a required opening in a pitched roof 55

Part III

PITCHES AND ROOF FRAMING. Pitches and degrees — Pitch lines and reversed pitch — Steep pitches — What constitutes a full pitch — To cut rafters with the square — Length of jacks — Simplest way to frame a roof — Additions and porches — Cuts, lengths and bevels of rafters — Plan of roof — Unity rule — Measurement line of all jacks, hips and valleys — Backing line for octagon hip — For a triangular building — Tail end cut of hip or valley — Side cut of jacks — Octagon jacks — Plumb cut of rafters — Side cut of hip — Lengths, cuts and bevels of common rafters — Lineal board measure — Length of rafters for odd runs 74

Part IV

RULES AND EXAMPLES. To lay off an octagon — To lay off a hexagon — To make an ellipse — To make an oval — To bend a board for a circle — To find the number of courses of shingles for a roof — To draw a polygon in a given circle — To divide a circle into any number of equal parts — To cover a circular dome — To cover a conical roof — To kerf a board to bend to a given circle — The protractor 139

Part V

QUESTIONS AND ANSWERS. Framing a circular porch — End cut of hip to rest on adjoining roof — Cutting rafters — How to find length of hip rafters — Seat and plumb cut of

hood rafters — Side cut of the hip — How to cut a hip rafter — A square pitched roof — Miter cut on a moulding — Length and cuts of hip rafters — To square a tapering timber — Explaining board measure — Framing a gambrel roof — Side cut of the jack — Length of hip rafter — How to find length of brace — Fitting a hip jack — Miters for uneven pitches — Valley cuts of planceer — Exact length and cut of valley — Regular and irregular rafters..... 159

Vol. II

The Steel Square

And Its Uses

Part I

MISCELLANEOUS RULES. Measurement — To find number of yards of plastering or painting — To divide a board into equal parts — To obtain diagonal of parallelogram — To find circumference of a circle — To find side of greatest square in a circle — To determine proportions of cylindrical bodies — To determine center of a circle — To find square of equal area to a given circle, etc.

THE following rules and examples have been gathered from various sources, and although they touch upon topics already treated, they are here presented with the confident belief that the reader willfind among them a number of easy solutions of problems that heretofore have caused him much time and trouble to work out.

Measurement.—Let us suppose that we have a pile of lumber to measure, the boards being of different widths, and say 16 feet long. We take our square and a bevel with a long blade and proceed as follows: First we set the bevel at 12 inches on the tongue of the square, because we want to find the contents of the board in feet,

12 inches being one foot; now we set the other end of the bevel blade on the 16 inch mark on the blade of the square, because the boards are 16 feet long. Now, it must be quite evident to any one who would think for a moment, that a board 1 foot wide, and 16 feet long, must contain 16 feet of lumber. Now let us take a board 11 inches wide, and 16 feet long, we just move our bevel from the 12 inch mark to the 11 inch mark, on the tongue, and look on the blade of the square for the true answer; and so on with any width, so long as the length is 16 feet. If the stuff is two inches thick, double the answer, if three inches thick treble the answer, etc.

Now, if we have stuff 14 feet long, we simply change the bevel blade from 16 inches on the square blade, to 14 inches, keeping the other end of the bevel on the 12 inch mark, 12 inches being the constant figure on that side of the square.

To Find Number of Yards of Plastering or Painting.—If we want to find out how many yards of plastering or painting there are in a wall, it can be done by this method quite easily. Let us suppose a wall to be 12 feet high and 18 feet long, and we want to find out how many yards of plastering or painting there are in it, we set the bevel on the 9 inch mark on the tongue (we take 9 inches because 9 square feet make one square yard, (we take 18 inches, one of the dimensions of the wall, on the blade of the square; then after screwing the bevel tight, we slide it from 9 inches to 12 inches, the latter number

being the other dimension, and the answer will be found on the blade of the square. It must be understood that 9 inches must be a constant figure when you want your answer to be in yards, and in measuring for plastering it is as well to set the other end of the bevel on the figure that corresponds with the height of the ceiling, and then there will be no movement of the bevel required further than to move it on the third dimension. This rule is a very simple and a useful one; of course openings will have to be allowed for, as this rule gives the whole measurement.

To Divide a Board Into Equal Parts.—Fig. 145 shows how to divide a board into an even number

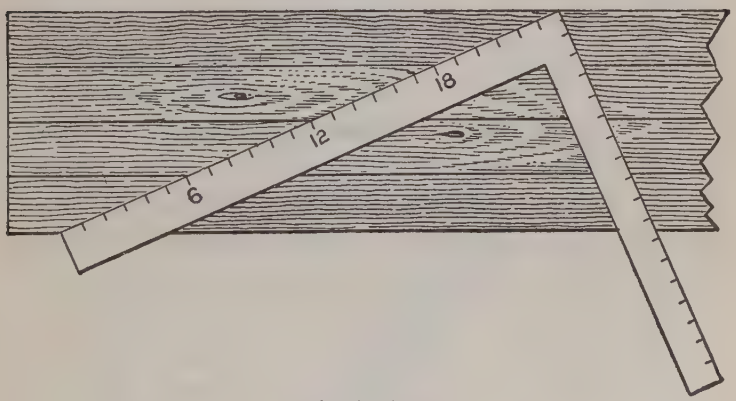

FIG. 145

of parts, each part being equal, when the same is an unequal number of inches, or parts of an inch in width. Lay the square as shown, with the ends of the square on the edges of the board, then the points of division will be found at 6, 12, and

18, for dividing the board into four equal parts; or at 4, 8, 12, 16, and 20, if it is desired to divide the board into six equal parts. Of course the common two-foot rule will answer this purpose as well as the square, but it is not always convenient.

To Obtain Diagonal of Parallelogram. — If the diagonal of a parallelogram withint he range of the square is required, it can be obtained as follows: Set the blade of the bevel on $8\frac{3}{4}$ inches on the tongue of the square, and $12\frac{3}{8}$ inches on the blade; securely fasten the bevel at this

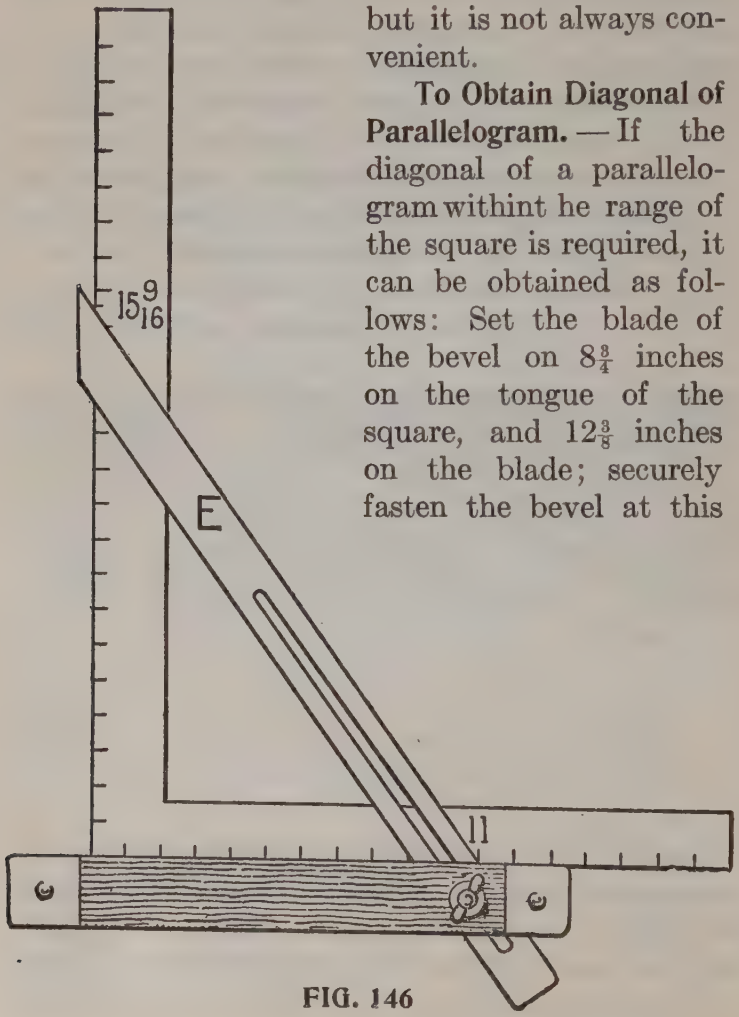

FIG. 146

angle. Now, suppose the parallelogram or square as in Fig. 146 to be 11 inches on the side, then move the bevel to the 11 inch mark on the tongue of the square, and the answer, 15 and 9-16, will be found on the blade. All problems of this nature can be solved with the square and bevel as the latter is now set. There is no particular reason for using $8\frac{3}{4}$ and $12\frac{3}{8}$, only that they are in exact proportion to 70 and 99. $4\frac{3}{8}$ and 6 3-16 would do just as well, as they are in the same proportion.

To Find the Circumference of a Circle with the square and bevel proceed as follows: Set the bevel to 7 on the tongue and 22 on the blade; move the bevel to the given diameter on the tongue of the square, and the approximate answer will be found on the blade. When the diameter is wanted the operation is simply reversed, that is, we put the bevel on the blade and look on the tongue of the square for the answer.

To Find Side of Greatest Square in a Circle.—If we want to find the side of the greatest square that can be inscribed in a given circle, when the diameter is given, we set the bevel to $8\frac{1}{2}$ on the tongue and 12 on the blade. Then set the bevel of the diameter on the blade, and the answer will be found on the tongue.

To Determine Proportions of Cylindrical Bodies.—In Fig. 147 is shown a method to determine the proportions of any circular presses or other cylindrical bodies, by use of the square. Suppose the small circle, N, to be five inches in diameter

and the circle R is ten inches in diameter, and it is required to make another circle, Z, to contain the same area as the two circles N and R. Measure line a, on the square, from five on the tongue to ten on the blade, and the length of this line A from the two points named will be the diameter of the larger circle Z. And again, if you want

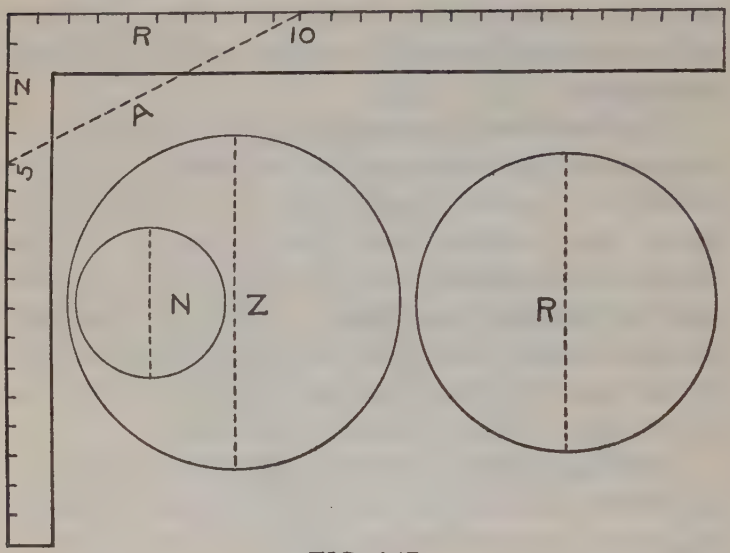

FIG. 147

to run these circles into a fourth one, set the diameter of the third on the tongue of the square, and the diameter of Z on the blade, and the diagonal will give the diameter of the fourth or largest circle, and the same rule may be carried out to infinite extent. The rule is reversed by taking the diameter of the greater circle and laying diagonally on the square, and letting the ends touch

whatever points on the outside edge of the square. These points will give the diameters of two circles, which combined, will contain the same area as the larger circle. The same rule can also be applied to squares, cubes, triangles, rectangles, and all other regular figures, by taking similar dimensions only; that is, if the largest side of one triangle is taken, the largest side of the other

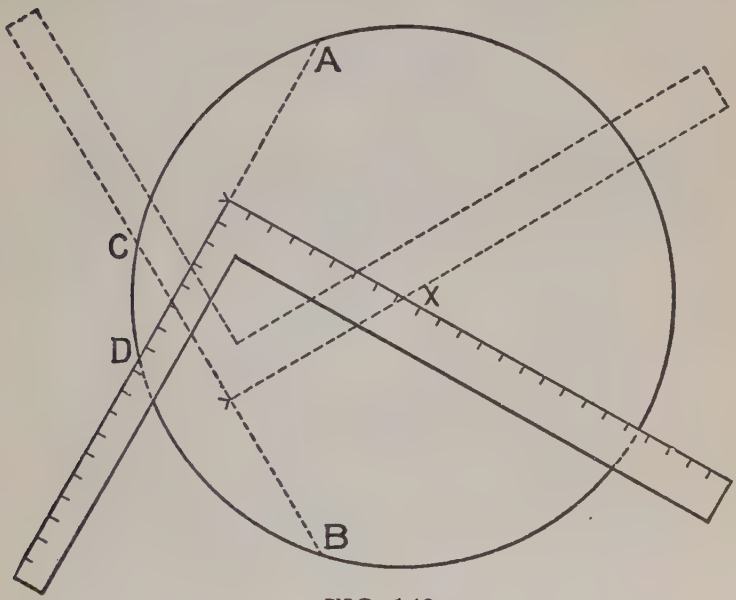

FIG. 148

must also be taken, and the result will be the largest side of the required triangle, and so with the shortest side.

To Determine Center of a Circle.—In Fig. 148 we show how the center of a circle may be determined without the use of compasses; this is based

on the principle that a circle can be drawn through any three points that are not actually in a straight line. Suppose we take A B C D for four given points, then draw a line from A to D, and from B to C; get the center of these lines, and square from these circles as shown, and where the square

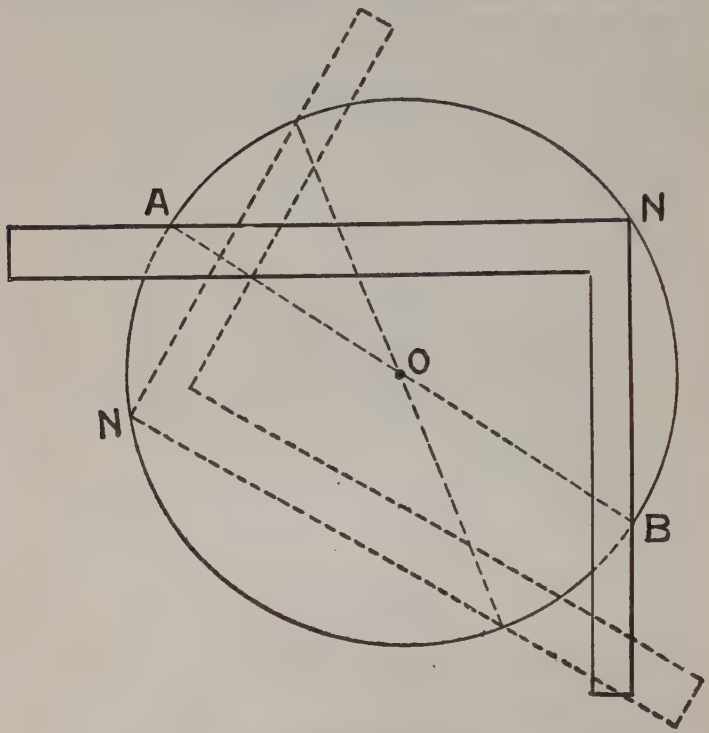

FIG. 149

crosses the line or where the lines intersect, as at X, there will be the center of the circle. This is a very useful rule, and by keeping it in mind the mechanic may very frequently save himself

much trouble, as it often happens that it is necessary to find the center of the circle, when the compasses are not at hand.

Another Quick Method of finding the center of a circle by means of the steel square is shown in Fig. 149. Let N N, the corner of the square, touch the circumference, and where the blade and tongue cross it will be equally divided; then move the square to any other place and mark in the same way and straight across, and where the line crosses A, B, as at O, there will be the center of the circle.

To Find a Square of Equal Area to a Given Circle, we set the bevel to $9\frac{3}{4}$ inches on the tongue, and 11 inches on the blade; then move the bevel to the diameter of the circle on the blade, and the answer will be found on the tongue. If the circumference of the circle is given, and we want to find a square containing the same area, we set the bevel to $5\frac{1}{2}$ inches on the tongue and $19\frac{1}{2}$ inches on the blade.

To Obtain Circumference of Circle of Given Diameter.—There are quite a number of methods of obtaining approximate proportions of the diameter of circles to their circumferences. The true proportion, or, as it is sometimes expressed, the squaring of the circle, is one of those feats, like the discovery of perpetual motion, and is as far from being accomplished as ever. At any rate, it makes but little difference at this time to the operative mechanic, whether the circle can be squared or not, so long as he can get near enough

to the truth to satisfy the requirements at hand satisfactorily, and to aid him in this, the following method is shown of obtaining the circumference of circles when the diameter is given, by use of the square. Of course, as shown in the cut the rule will apply to circles of any reasonable dimensions.

Let A B, in Fig. 150, be a straight line, or the straight edge of a board; then apply the square as shown, placing the 16 inch mark on the blade at C, and the 5 inch mark on the tongue at D. See that the junctions of the blade and tongue of the square with the line A B, are accurately placed, for on this depends the truth of the results. Now, suppose we wish to ascertain the circumference of a circle whose diameter is 8 inches; commencing at the point, C, we space off the diameter, 8 inches, three times, on the line C O, as shown at 8″ 8″ 8″; then square down the line 8″ F, then C F will be the circumference of a circle whose diameter is 8. It will be seen, by dotted lines in the cut, that the circumference equals the diagonal of a rectangle whose sides are respectively 24 and 7 and 15-32 inches; so that by adopting these figures (24 and 7 and 15-32), it enables the operative to use the full length and capacity of the square. The better way however, is to work from a basis of 16 and 5, and draw the lines, C O and A B, to considerable length, so that they may be made available for dimensions beyond the range of the square. Now, let us suppose an instance where the circumference of a circle is wanted,

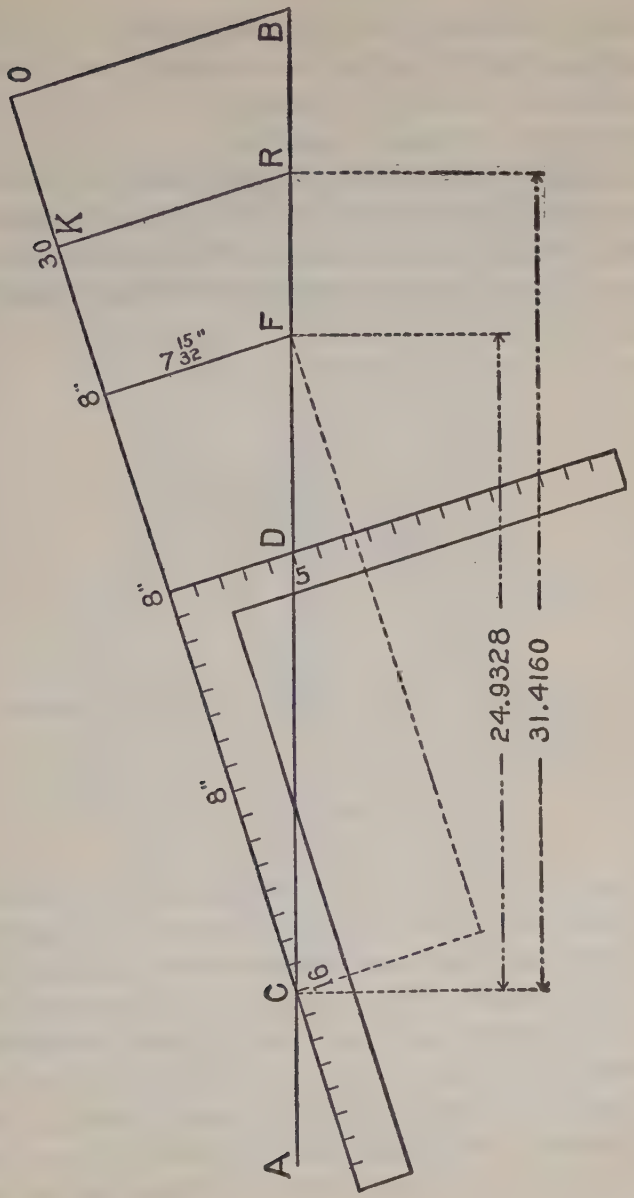

FIG. 150

whose diameter is 10; we simply space off three tens, or thirty inches, on the line C O, which, in this case, is at K. Square down from K to R, and C R is the length sought.

Now, to prove this, let us proceed as follows: Diameter = 10 x 3.1416 = 31.4160, or nearly thirty-one inches and fifteen thirty-seconds of an inch. Now, if we measure C R, we will find that the

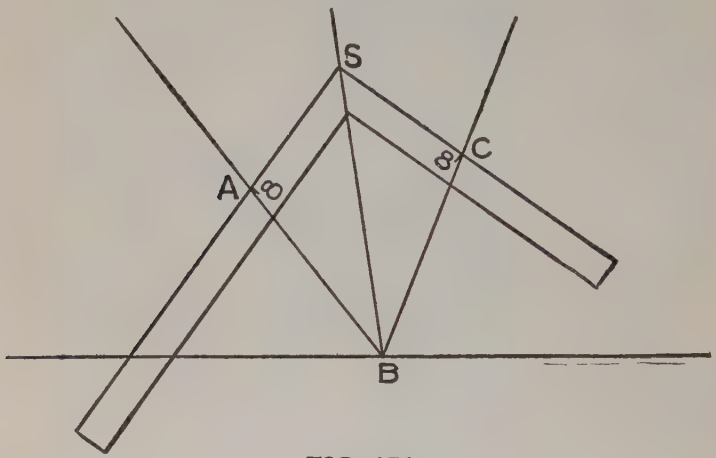

FIG. 151

distance is exactly 31.4160 inches, and is, therefore, the answer sought. It will be seen by these examples that the circumference of circles may be easily obtained when the diameters are known. So, also, may the diameters be found when the circumferences are known, for by laying off the circumference on the line A B, as C D in Fig. 150 for instance, and then applying the square as there exhibited, and dividing the distance from the

heel of the square to the point C into three equal parts. One of these parts is the diameter of the circle whose circumference equals the distance from C to D.

Method of Dividing Angles.—A B C, Fig. 151, is an acute angle. We wish to divide it. Measure up from B to A any distance, make B C the same distance, place the square on the points as shown on A and C, keeping the distance on the blade and tongue the same, then the heel or corner of the

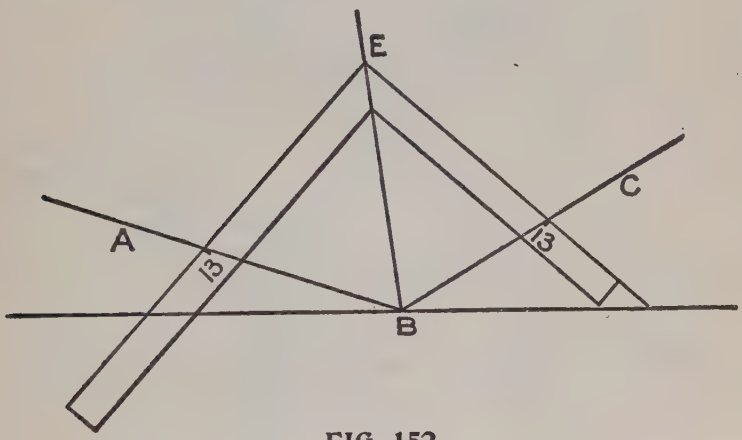

FIG. 152

square, S, will give the points through which to draw a line passing through the angle at B, and the division will be complete.

Again: Let Fig. 152 be an obtuse angle; make B A and B C equal. Apply square as shown, keeping equal distances on the blade and tongue at the points of contact A and C. The point E on the heel of the square will be one point from

which to draw a line through B, which forms the division of the angle.

In Fig. 153 we show a number of angles, which are treated same as the foregoing. At the junc-

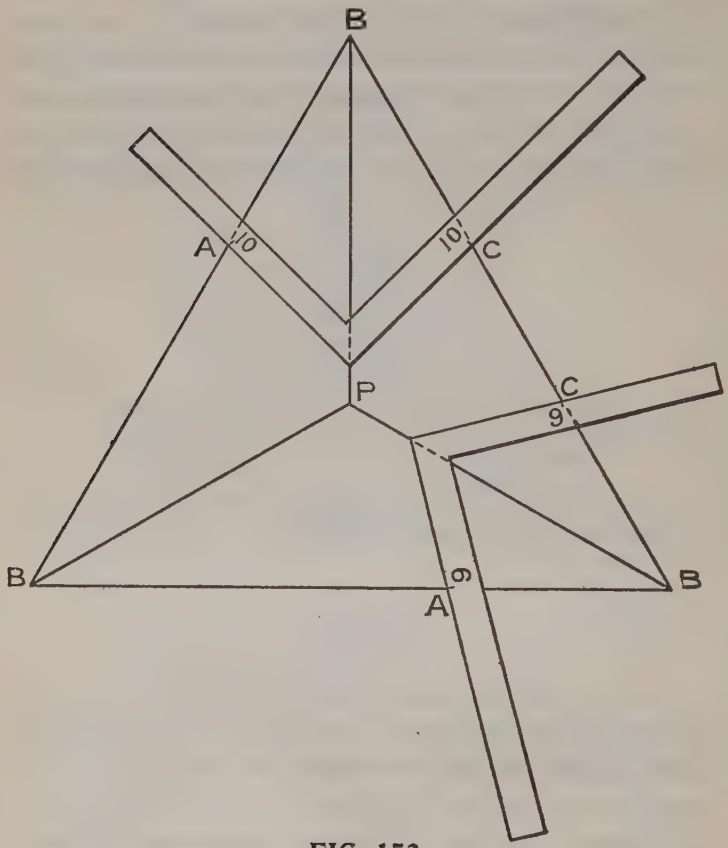

FIG. 153

tion of the lines drawn from the angles B B B, the center of the triangle is found at P.

This method of bisecting an angle is very use-

ful, inasmuch as the cut or miter of any mouldings placed at any angle on a flat surface may be obtained. This is shown at Fig. 154, which may

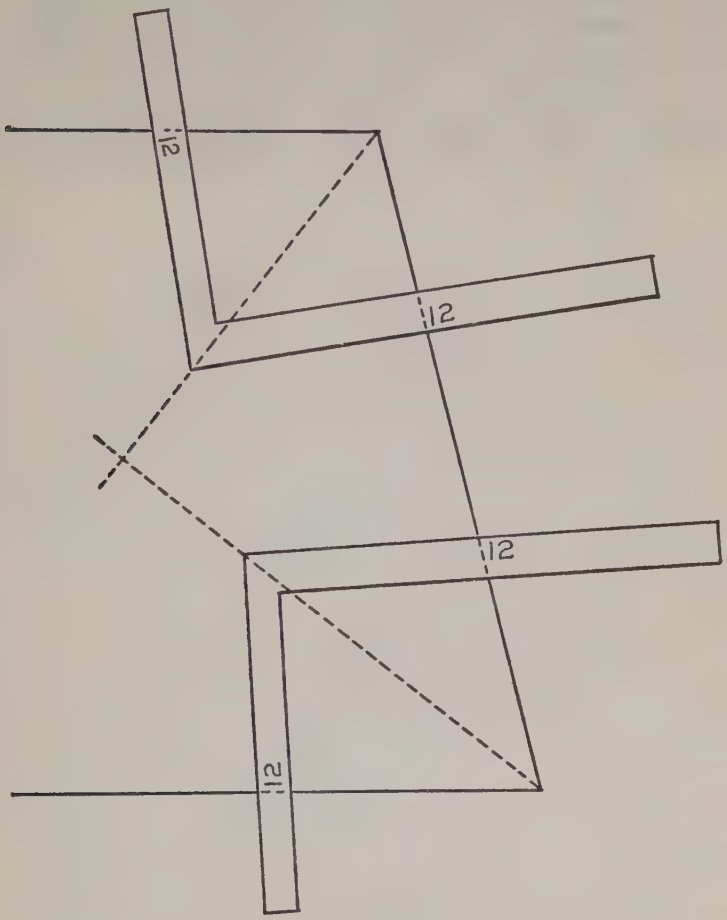

FIG. 154

be a panel or other like surface. This diagram shows that angles of any form and in any posi-

tion may be equally divided by a proper use of the steel square.

To Form a Template or Set Square.—Suppose we want to find the angle 45 degrees on a board, we mark any two points A C, Fig. 155, on the edge of a board; apply the square as shown, keeping its sides on A C; then the distance on each side of the square being equal, measuring from its

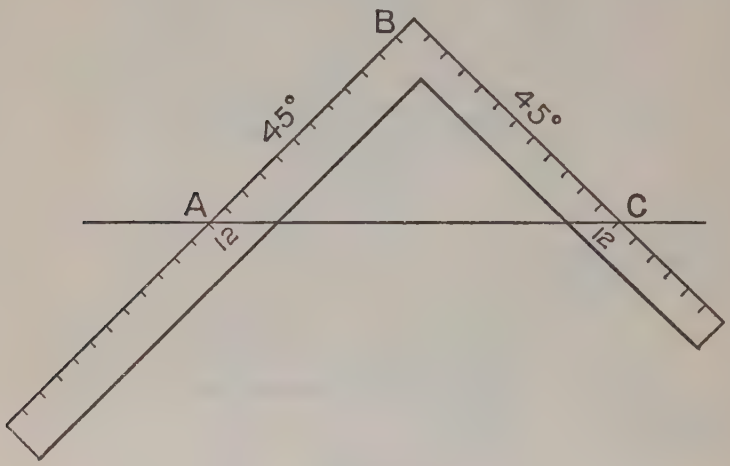

FIG. 155

heel or corner B gives the angle 45 degrees. If this portion be cut out it will form a templet or set square, which is very useful in drawing. The lines A B and C B are true miters, or angles of 45 degrees, with the line A C as their base.

In Fig. 156, A, B, C, R show the lines for forming a set-square having 60 degrees on the line C R, and 30 degrees on A R. This figure is formed with compasses, as follows: Make A C length of

base line; let B be half the distance between A C. From C B as centers and radius make the intersection at R, then by joining A R and C R the angles 30 degrees and 60 degrees are formed. This is the principle. To do all this with the

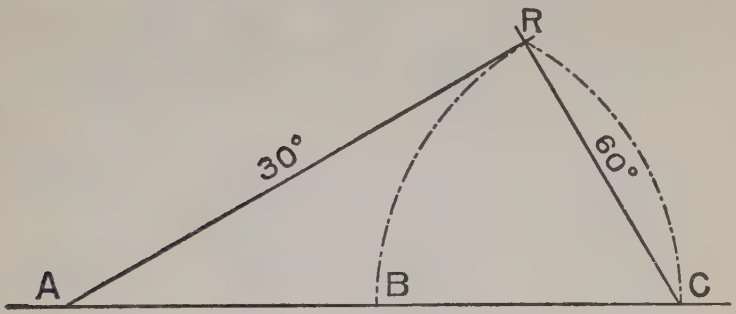

FIG. 156

square, simply take 23 inches on the blade and 13 inches on the tongue, and place these points on the line A B C, Fig. 157, and you have the angles at once. If the figure is greater than the square

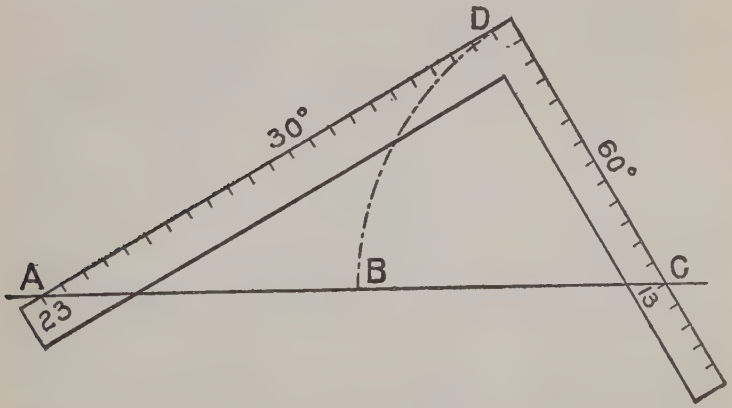

FIG. 157

can cover, then continue the line A D to the length required; then square down until the line cuts A B C, and the work is done. If a smaller figure is wanted, measure off on A D, or A B C, and square over.

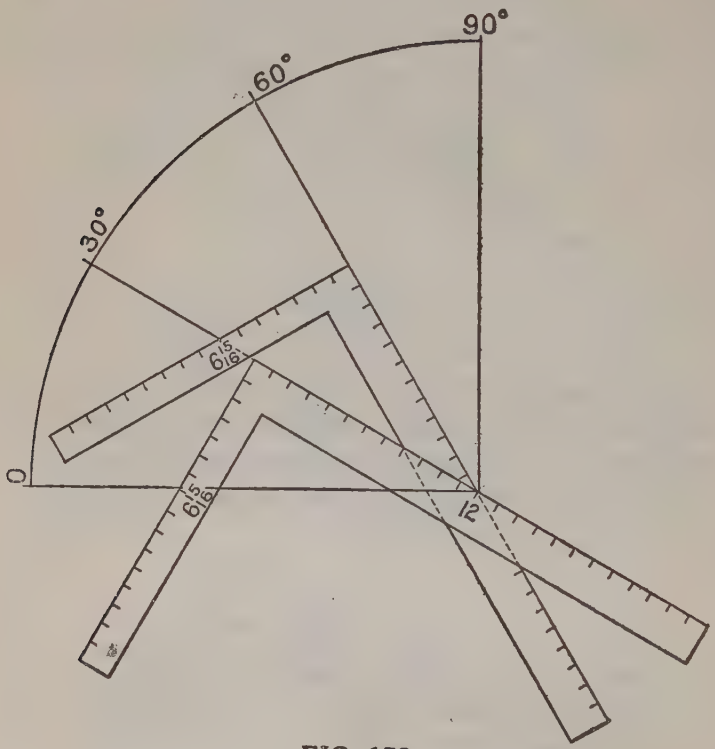

FIG. 158

In Fig. 158 we show a quarter of a circle trisected or formed into angles of 30, 60 and 90 degrees: 12 and 6 and 15-16 by the square will give 30 degrees and the remainder will be 60 degrees. These are things to remember, as the car-

penter and joiner will find them very useful in his everyday work.

Other Methods of Obtaining Circumference of Circles of Given Diameters.—Fig. 159 shows how the circumference of a circle may be obtained by the square, the diameter being given. The solution of this problem by use of the steel square has been attempted by a number of writers on

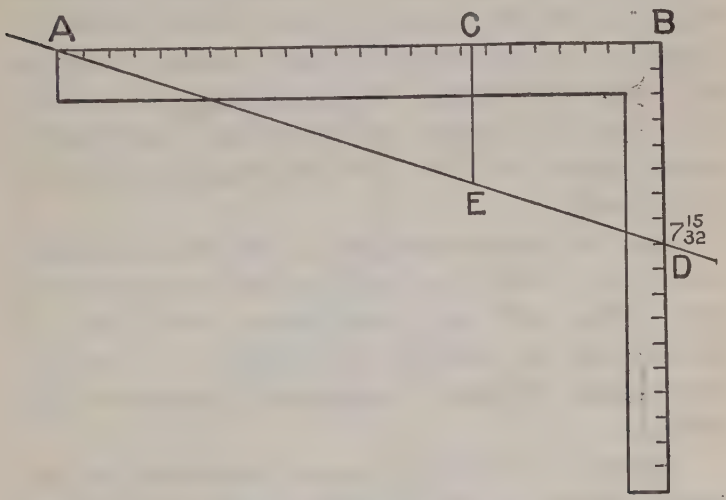

FIG. 159

carpentry. It is not claimed that absolute correctness is obtained in the following way, but it is claimed for this method that it is the nearest approach to correctness yet made by using the steel square. The method is not new, it having been employed for a number of years. Let A D represent the straight edge of a board, say 10 inches, or 12 inches wide; place the end of the blade of

square at A, and let D on tongue be 7 and 15-32 inches. Take three diameters from A to C, and square down a line from C, cutting A D at E; then A E equals the circumference. A circle whose diameter is eight inches would have a circumference equal to the line from A to D by this rule. It will be seen by this that any right angle whose base is 24, and having an altitude of 7 and 15-32, forms a constant by which any circumference may be obtained by spacing three times the diameter on the line A B, and squaring down as at C, the hypothenuse being the required answer. The line A B may be continued indefinitely, being careful to retain the proper angle as shown in diagram.

Fig. 160 shows a method by which the circumference of a circle may be obtained from the diameter. This will be found very convenient in almost all the trades; particularly is it so for sheet-metal workers, carpenters, plasterers and coopers.

Describe a circle in some proportion to the actual work, say one inch to the foot; then apply the heel of the square at the center of the circle, as at A, then project the lines A B and A C as shown. Now connect the points where the radial lines touch the circle by the line B C, and from the middle point of this line draw the line D E to the circumference. To obtain the circumference of the circle, add to three times the diameter the distance D E, which will give the desired result practically correct.

In Fig. 161 we give a practical illustration. Suppose we have a circular tank, or a sheet-metal vessel of any sort that requires to be twenty feet in diameter. Draw a circle twenty inches in diameter. This is one inch to the foot; place the

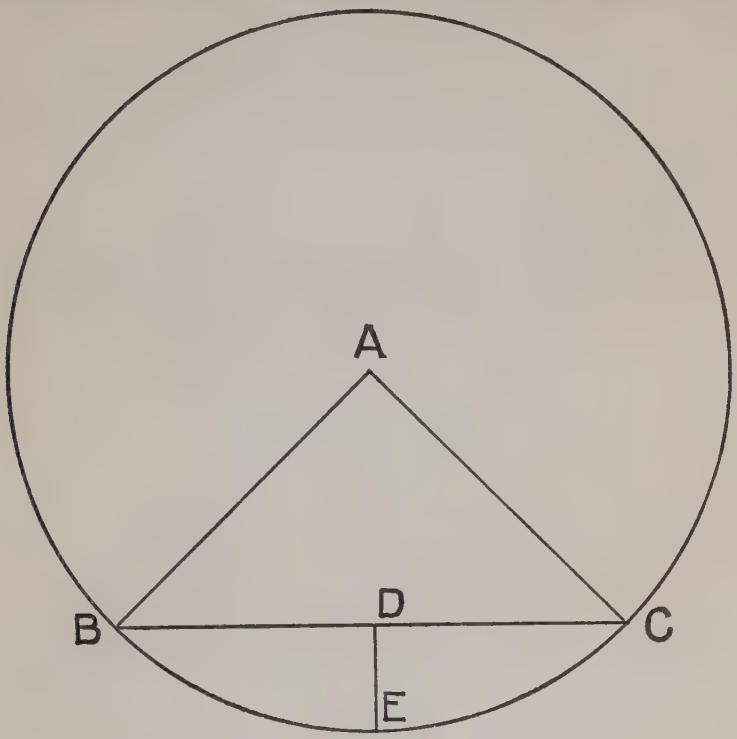

FIG. 160

square with the heel on the center as at A, draw lines along side blade and tongue as shown, cutting circumference, then at the junction of these lines draw a line same as B C in Fig. 160, then draw the short line from the center of the line B C, Fig.

160 and you have the circumference near enough for all practical purposes. It will be seen at once how useful this method may prove to the mechanic and how easily applied. For getting the length of hoops, or the number and breadth of staves

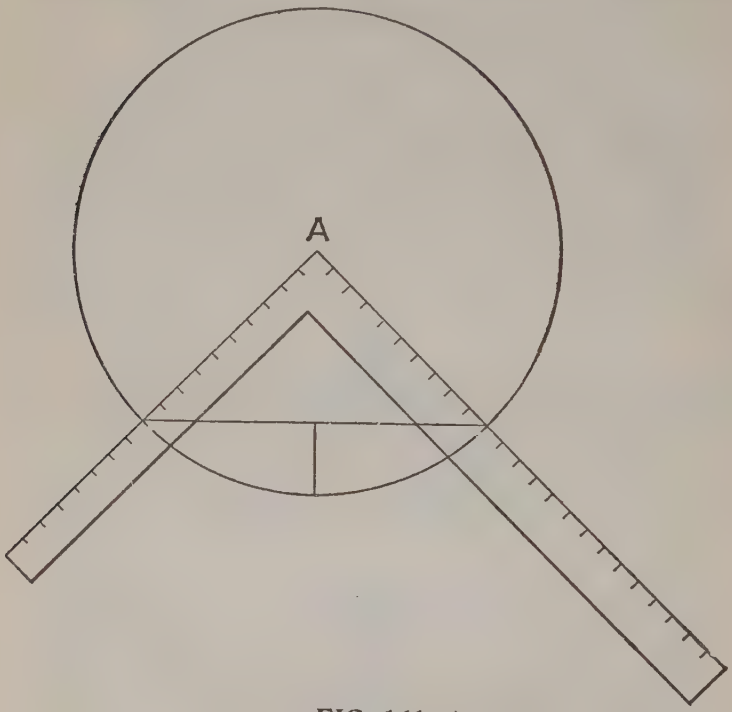

FIG. 161

for a circular tub, it will prove quite a useful method.

To Describe a Circle with the Aid of the Steel Square.—This may be accurately done provided the diameter of the circle does not exceed the length of the shorter member of the square.

In Fig. 162 let A B be the desired diameter and at these points drive small brads. Then place the inner edges of the square as shown touching the brads and with a pencil at the angle of the square as at C move the square, keeping it close up to the brads, and it will have made a true

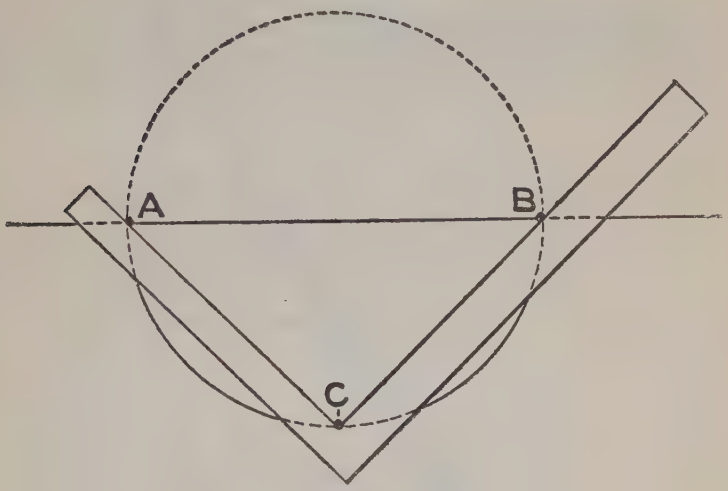

FIG. 162

semi-circle. Reverse the square and repeat the operation and the true circle will be complete.

How Square May be used to Form Ellipses.—In Fig. 163 we show how the square can be used, in lieu of the trammel, for the production of ellipses. Here the square, E D F, is used to form the elliptical quadrant, A B, instead of the cross of the trammel; h l k may be simply pins, which can be pressed against the sides of the square while the tracer is moved. In this case the ad-

justment is obtained by making the distance, hl, equal to the semi-axis minor, and the distance l k, equal to the semi-axis major.

To Describe a Parabola.—Fig. 164 shows a method of describing a parabola by means of a

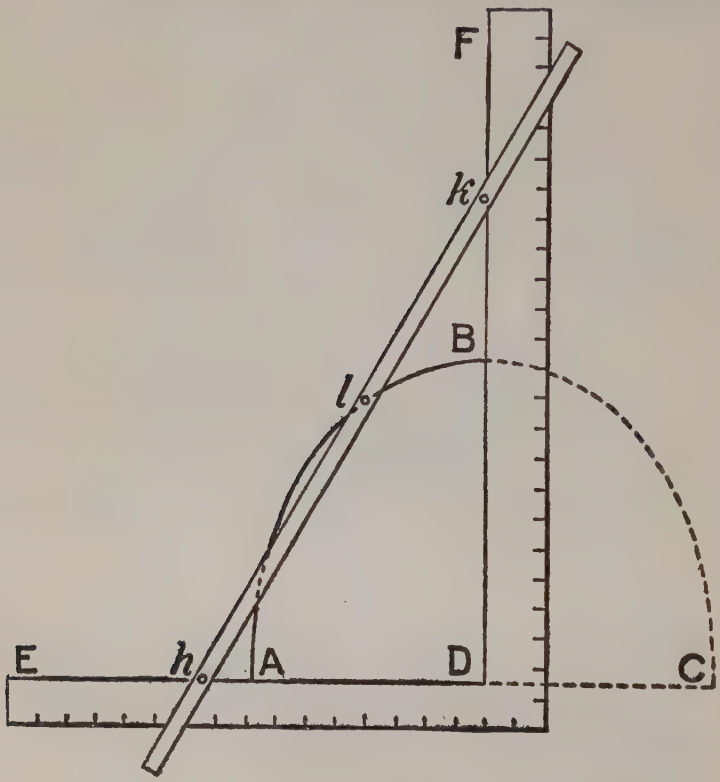

FIG. 163

straight rule and a square, its double ordinate and abscissa being given. Let A C be the double ordinate, B the abscissa. Bisect D C in F; join B F, and draw F E at right angles to B F, cutting the axis

B D produced in E. From B set off B G equal to D E, and G will be the focus of the parabola. Make B L equal to B G, and lay the rule on straight edge H K on L, parallel to A C. Make A P equal B G. Take a string P F G, equal in length to L E; attach one of its ends to a pin, or other

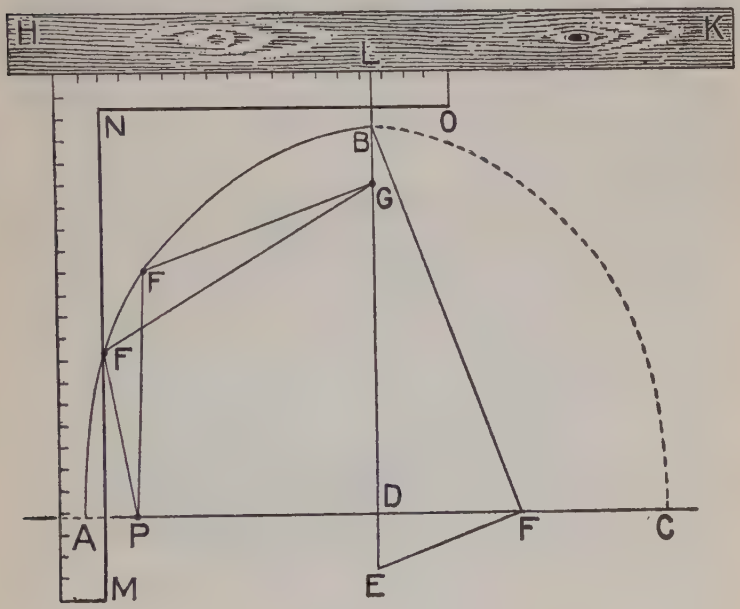

FIG. 164

fastening, at G, and its other end at P. If now the square be slid along the straight-edge, and the string be pressed against its edge M N, a pencil placed in the bight at F will describe the curve.

To Determine What Weight is Required to Balance Lever.—The two arms of a horizontal lever are respectively 9 inches and 13 inches in

length from the suspending point; and a weight of 10 lbs. is suspended from the shorter arm, and it is required to know what weight will be required to suspend on the long arm to make it balance. Set a bevel on the blade of the square at 13 inches and the other end of the bevel on the 9 inch mark on tongue of square, then slide the bevel from 13 inches to 10 on the blade of square, and the answer will be found on the tongue of the square. It is easy to see how this rule can be reversed so that a weight required for the shorter arm can be found.

To Make a Semicircular Groove.—Sometimes the workman may have a semicircular groove to make, either as a pattern for casting or as a moulding of some sort. Now it is a well known geometrical fact that the angle within a semicircular circumference is a right angle; this being admitted, it may be taken advantage of in making such hollow forms as we have mentioned, and which we illustrate by the Fig. 165. The curve or semicircle may be worked out by a plane or other instrument, and to prove the correctness of the work, the steel square may be applied as shown. If the square touches at only two points, then the groove is not deep enough, or else it is too deep, in which case the operator must remove more stuff from the groove, or from the flat surface of the work, if permissible. By giving the square an oscillating motion, so as to make the corner sweep the entire surface of the curve, the accuracy of the work may be ascertained whenever the square is applied.

In this instance the square may be used as a templet, and the advantages of it in such cases are that it may be used in any sized semicircular groove, thus saving a multiplication of templets. This principle may be extended further, as it is equally applicable to a hollow hemisphere as to a hollow semicylinder, which makes the knowledge of this fact of great value to wood or metal

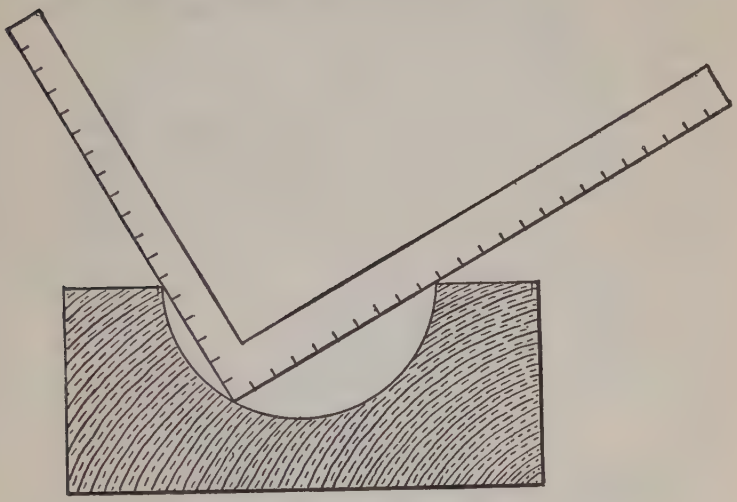

FIG. 165

turners, as it can be easily seen that a hollow hemisphere must be nearly true if the cutter or heel of the square touches every point, and the blade and tongue lie on the exact diameter. The operator can apply this principle to many cases, if he is at all ingenious.

To Cut for Pitched Covers.—Here is a little problem that may come into use on many occas-

ions: Suppose we want to cut a piece of sheet metal, paper or thin wood so that it may form a cone, or a cover for a vessel of some sort; say the pitch or height at center is to be four inches, and the diameter of the base sixteen inches. Lay off the pitch on the tongue and half the diameter

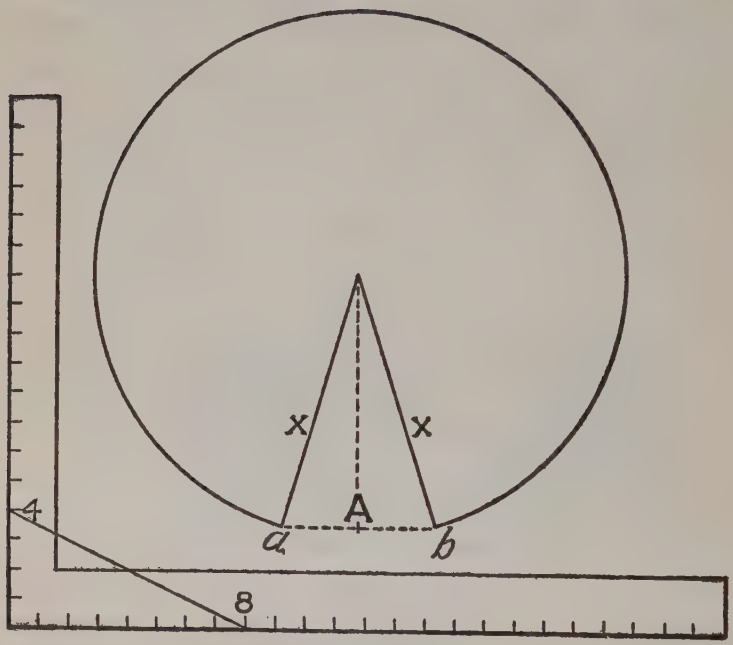

FIG. 166

on the blade. The diagonal, from 4 to 8, as shown in Fig. 166, gives half the diameter of the circle, to which set your compasses. Describe a circle as at Fig. 166, draw a line from the center as shown, square off from A, on each side three-tenths of the radius, ending at a, and b. The

gore left requires to be removed, then when the edges X X are brought together the cone is complete.

The Circumference of an Ellipse or Oval is found by setting 5 and five-eights on the tongue and $8\frac{3}{4}$ inches on the blade; then set the bevel to the sum of the longest and shortest diameters on the tongue, and the blade gives the answer.

The Sectional Part of a Circular Frame or Wheel can easily be found by the aid of the square as follows: Draw line A, Fig. 167, and on it place the tongue of the square as shown, letting the 12 inch mark be the starting point.

Now suppose we wish to make a frame with eight equal parts. Draw a line from 12 on the tongue, passing at 12 on the blade, and on this lay off the desired radius, and swing down to A. The space from A to C will be the desired part. If twelve parts are wanted then draw the line passing at 6 and 15-16 on the blade. The part from A to B being that proportion.

If one-half the parts mentioned above are wanted then these parts may be doubled, or found as shown by the dotted lines below A. Great care must be exercised in laying out the diagram, the least variation of which will be multiplied by the number of parts used.

When making frames of very large diameters, it is better to increase the scale by raising the figures given by doubling, trebling, etc.

To Lay off a Miter or Equal Joint.—In our experience, we have frequently been asked how

a miter, or equal joint, could be laid off by using the square.

The matter is simple, but the many inquiries that have been received induce us to give a few

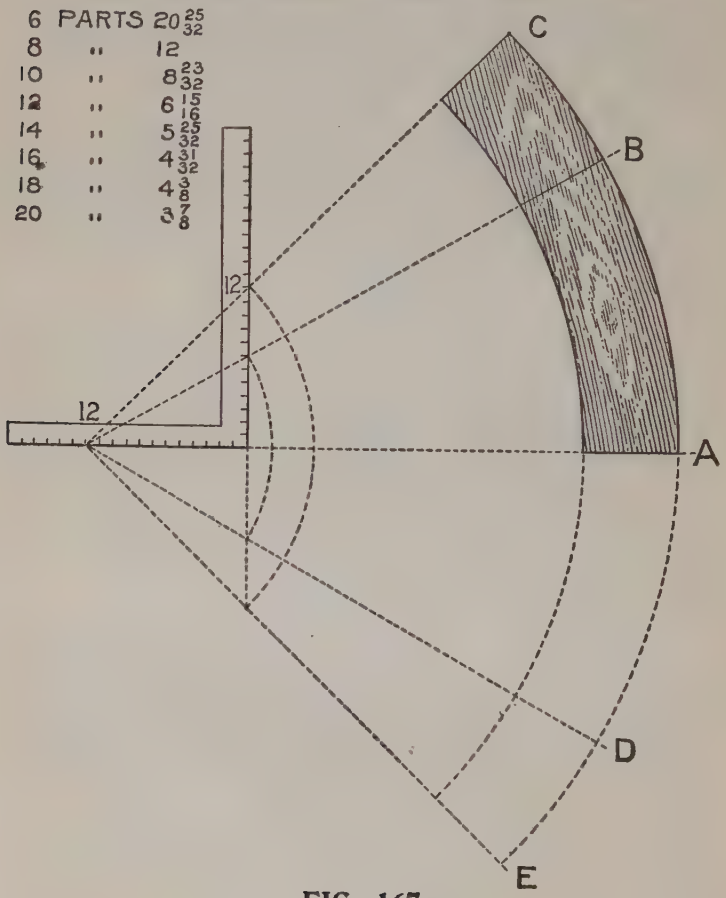

FIG. 167

examples of the manner in which advanced workmen generally accomplish this end. Let Fig. 168

represent an oblique angle formed by two parallel boards. To obtain the joint A, space off equal

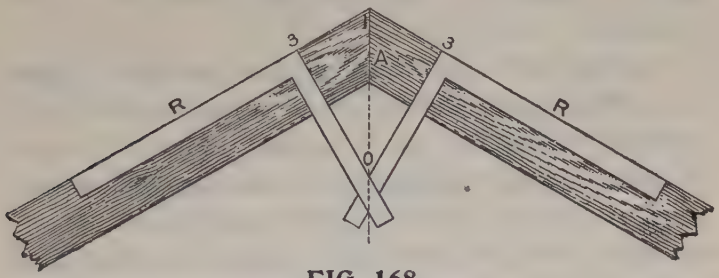

FIG. 168

distances from the point 1 to 3, 3, then square over from the lines, R, R, keeping the heel of the square at the points 3, 3. At the junction of the lines

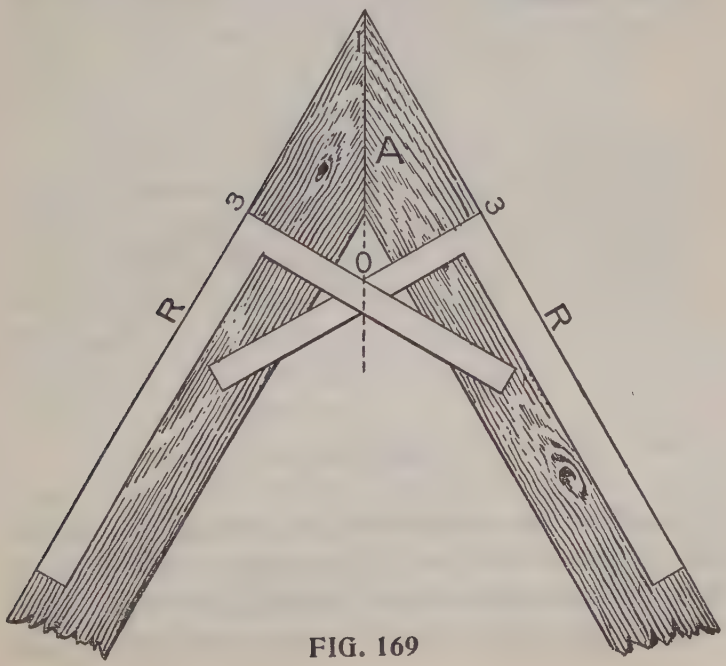

FIG. 169

formed by the tongues of the squares at O will be the point to take on the tongue, and $\frac{1}{3}$ on the blade. The latter will give the joint line, A, as defined.

To Find the Line of Juncture for an Acute Angle, we proceed as follows: Fig. 169 represents two parallel boards; 1 the extreme angle, 3, 3 equal distances from the angle 1 and are the points where the heel of the square must rest to form the lines O, 3; O shows the junction of the lines formed by the tongues of the squares, and then proceed as in the previous example.

It will be seen, by these two examples, that the bevel of a junction at any angle may be obtained by this method.

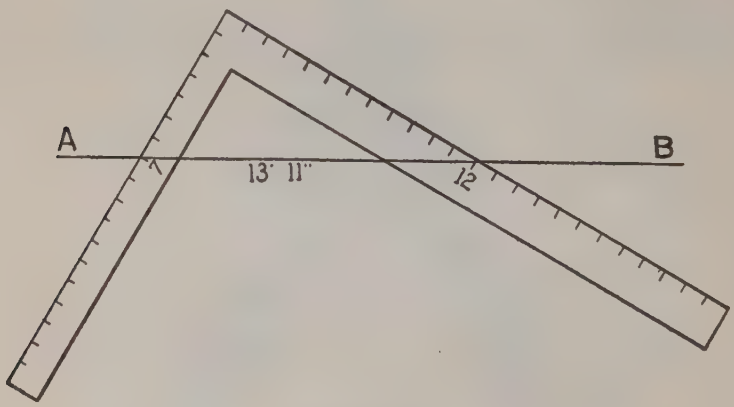

FIG. 170

To Find the Length of Braces and Other Timbers.—Sometimes, when estimating on work, it becomes necessary to get the length of braces and other timbers, that would require considerable fig-

uring to obtain if the usual method of finding the length of the third side of a right angled triangle were adopted. The square, at this juncture, may be made use of with advantage, where the length of the lines wanted is within the range of the instrument, and almost any dimensions may be manipulated, by making the subdivisions of the inch represent inches, feet or yards. Suppose we want to get the length of a brace with unequal run of 7 and 12 feet respectively. Lay the two-foot rule across the square, putting the end on 7 on the tongue, and cutting the 12-inch line on the blade; then, as shown in Fig. 170, we will have on the side of the rule A B, 13 feet, 11 inches, or say 14 feet, which is near enough for the estimator's purpose, and if required for working purposes, the exact length and bevels may be obtained by careful measurement.

To Produce an Octagon.—Fig. 171 shows how an octagon can be produced by the aid of a steel square. Prick off the distance A O equal to half the distance of the square; mark this distance on the blade of the square from B to O, place the square on the diagonal, as shown, and square over each way. Do the same at every angle, and the octagon is complete.

To obtain the same figure with the compasses, proceed as follows: Take half the diagonals on the compasses, make a little over a quarter sweep from C, and at the intersection at D and E, then D-D or E-E form one side of an octagonal figure.

Again: Take a piece of timber twelve inches square, as in Fig. 172; take twelve inches on the blade and tongue from A to B, and A to C, mark at the point A, operate similarly on the opposite edge, and the marked points will be guides for

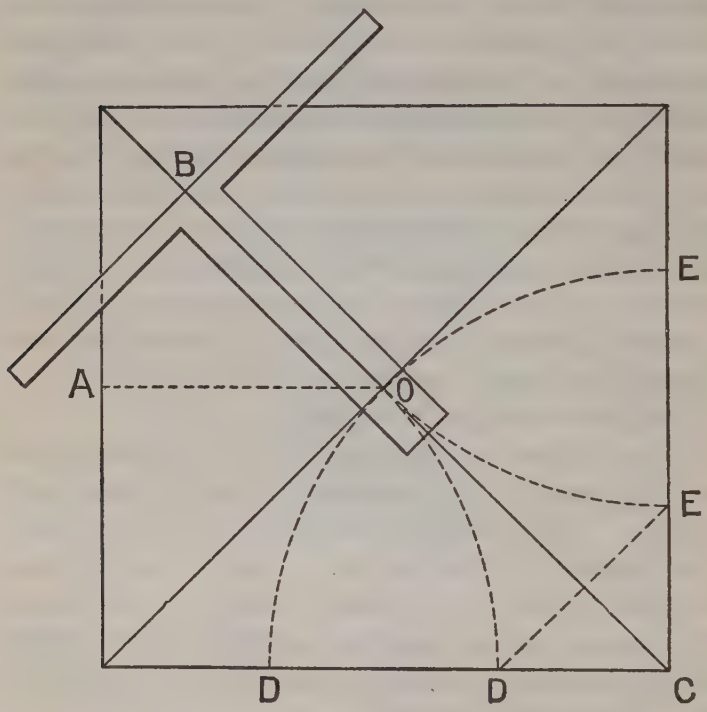

FIG. 171

gauge-lines for the angles forming an octagon. The remaining three sides of the timber can be treated in the same manner.

These points can be found with the carpenter's rule as follows: Lay the rule on the timber, partly

opened, as shown in the cut, prick off at the figures 7 and 17 as at A and B, and these points will be the guides for the gauge lines. The same points

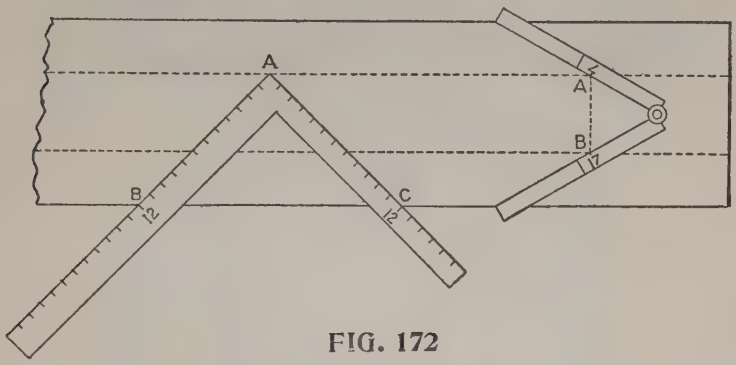

FIG. 172

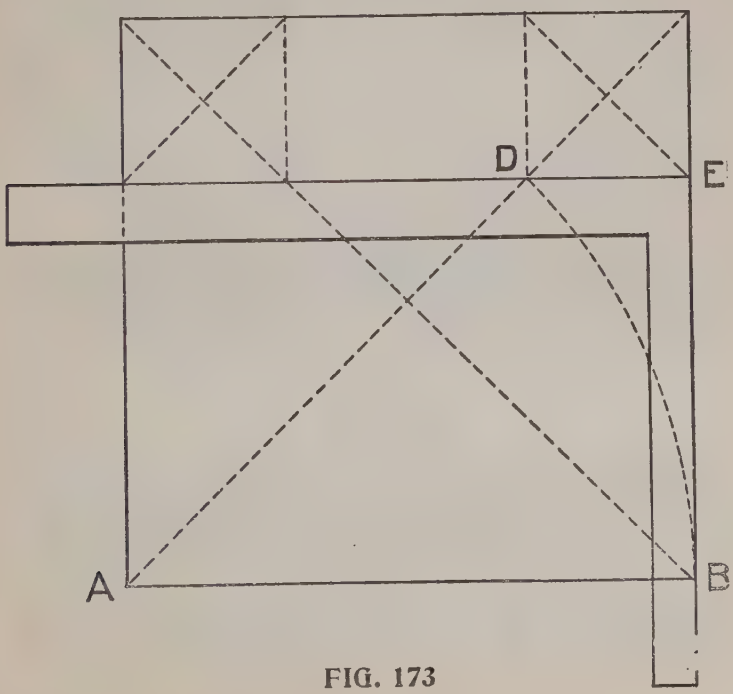

FIG. 173

can be found by laying the square diagonally across the timber and pricking off 7 and 17.

To Make a Moulder's Flask Octagonal, proceed as follows: The flask to be four feet across. Multiply 4x5 (as an octagon is always nearly as 5 to 12), which gives 20; divide by 12, which gives

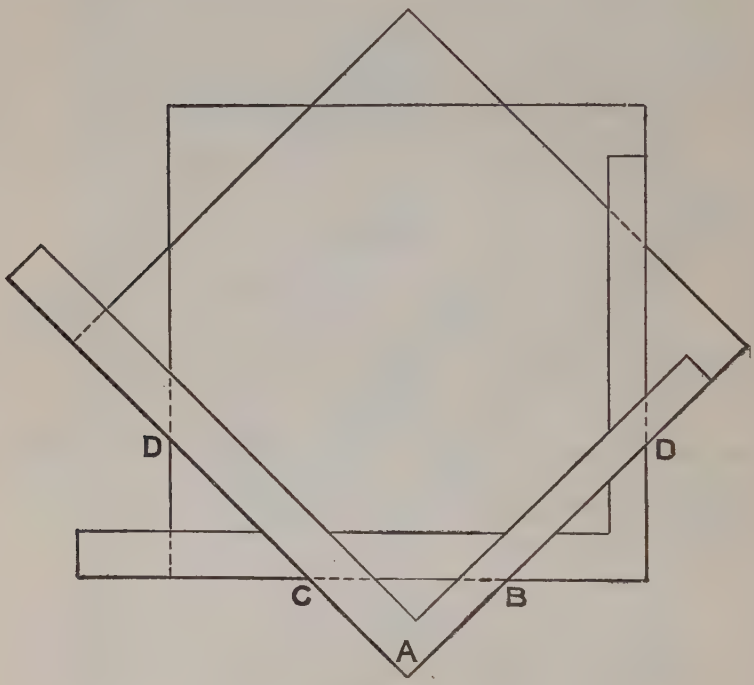

FIG. 174

1 and two-thirds feet, cut miter to suit this measurement, nail into corners of square box, and you have an octagon flask at once.

Another method of constructing an octagon is shown in Fig. 173.

Take the side as a b for a radius, describe an arc cutting the diagonal at d; square over from d to e, and the point e will then be the gauge-guide for all the sides.

Another method (Fig. 174), is to draw a straight line, c b, any length of desired side; then let a b and a c be corresponding lengths on the blade and

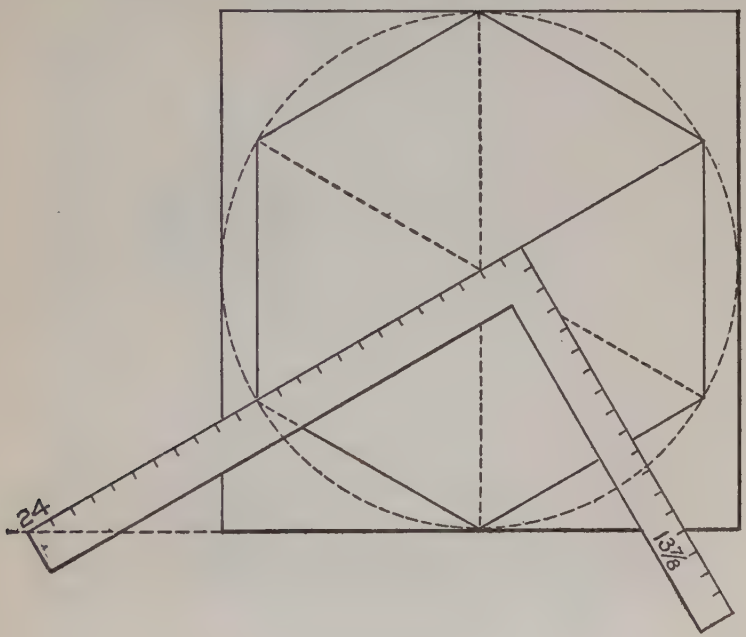

FIG. 175

tongue of the square, mark along either and move the square and mark also. Now use the square the same as before, and the marks d c and b d will equal c b.

To Make a Hexagon, Fig. 175, take 13 and $\frac{7}{8}$ inches on the tongue and 24 inches on the blade,

and apply as shown on a base line which forms a square around the figure.

Construction of a Pentagon or Five-sided Figure.—There are several methods of forming this figure, but we prefer the following: On a given line let A B, Fig. 176, be the length of one side;

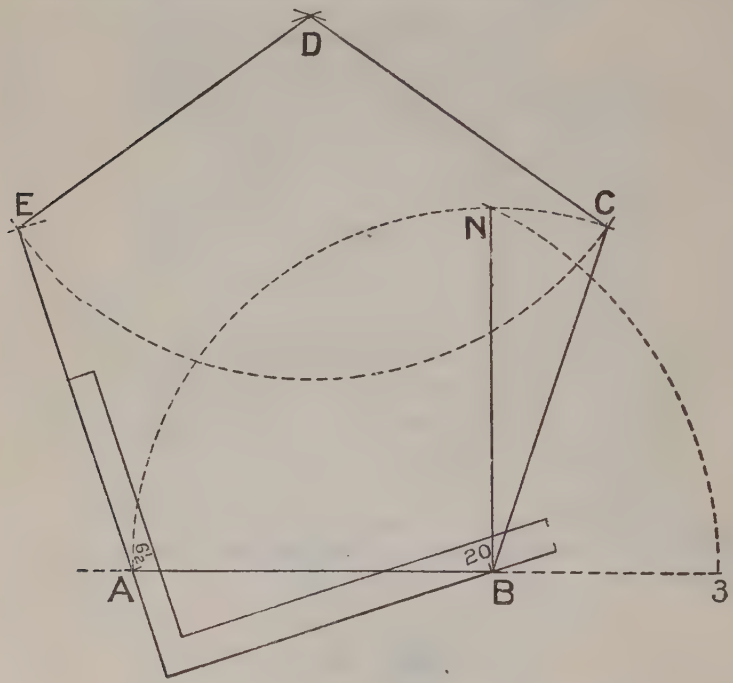

FIG. 176

divide this into two equal parts, marking it as at 2. From B square up a line, and make B N equal to A B, then with 2 as a center and 2N as radius, describe the arc, cutting the line A B at 3. Now take A3 for radius, and from A and B as centers

make the intersections at D; then from D, with a radius equal to A B, describe an arc as shown; then using A and B for centers, intersect the arc in E and C; connect these pionts together with straight lines, and the pentagon is complete.

This is a scientific way of forming this figure, but it may be obtained much easier by the square.

It may be necessary to explain that in regular equal-sided polygons the angles are equal, so any side of a regular polygon may be used for a base line. Let this fact be remembered, as it is important the student should keep it in mind when dealing with any problem connected with polygons, where the steel square is used: By careful examination of Fig. 176 it will be seen that the outer edge of the tongue of the square is in line with one side, A E, of the pentagon, measuring down below the base line, A B, six and one-half inches; then the 20 inch mark on the outer edge of the square will also touch the base line, A B, This position of the square then gives the exact inclination of the side of the pentagon with the base. Now if we reverse the square and place the $6\frac{1}{2}$ inch mark at B, and the 20 inch mark on the line A B, we give three sides of the figure. Now make the distance from A to E the same as A B, and we have the length of that side. Perform the same operation with B C. Then using A E and B C as base lines, we can form the complete figure. This shows how any pentagon having equal sides can be formed with the square.

We wish to recall again that $6\frac{1}{2}$ inches on the

tongue and 20 inches on the blade give the proper angle for forming pentagons.

To Obtain a Heptagon.—Fig. 177 shows a heptagon, or seven-sided figure, and the manner

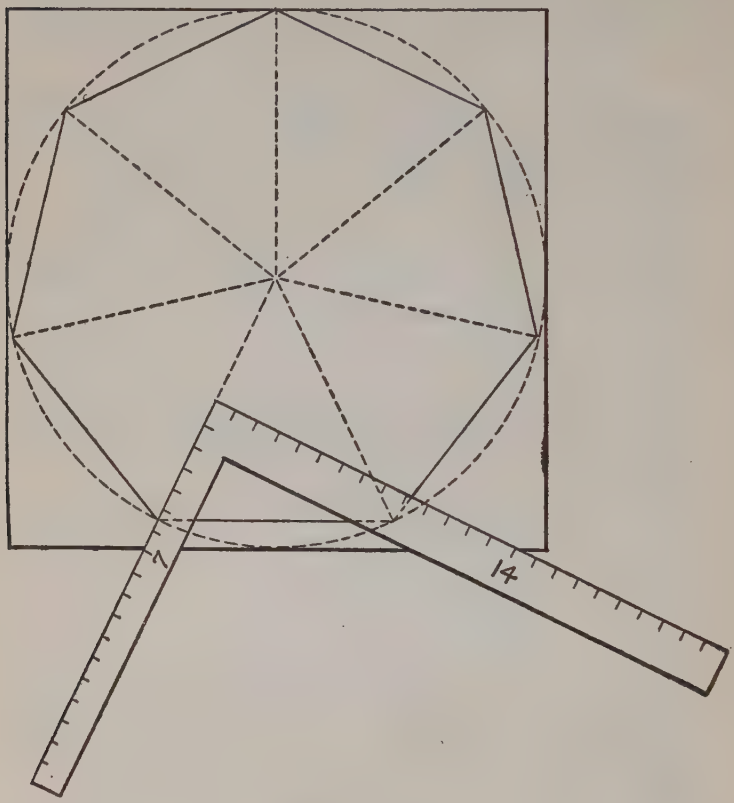

FIG. 177

in which it is obtained. To get the angle as shown, form a square in accordance with dimensions required; then inscribe a circle as shown; then place the square as represented, using the base line of

the outside figure having the tongue running in a line with the center, keeping the 7 inch mark on the base line; then on the blade the 14 inch mark will be over the base line. Hence, 7 inches on the tongue and 14 inches on the blade gives the figures for finding the lines for a heptagon.

To Lay Off an Octagon in a Square.—In Fig. 178, measure off the side of the square on its diag-

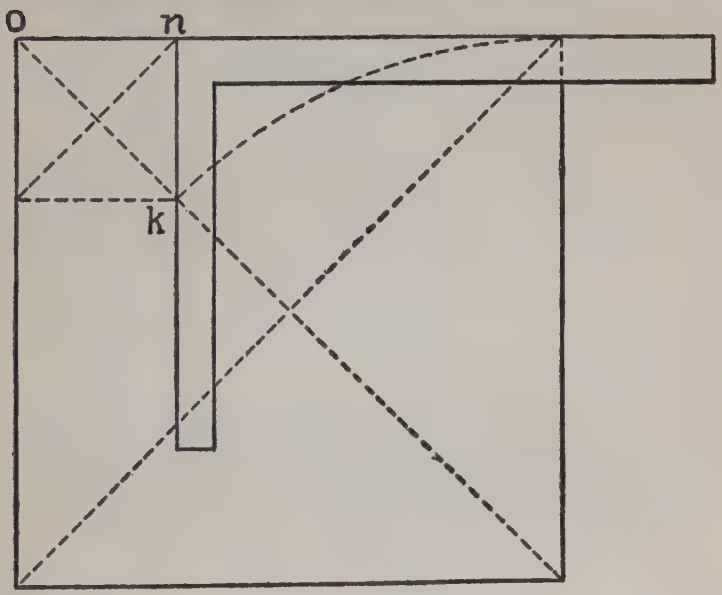

FIG. 178

onal k. Square from a side to the point thus found on the diagonal, and n o is the distance to be gauged from each corner, to mark the corners of the octagon.

When the Side of the Octagon is Given to Find the Square Width.—Suppose the side of the octagon

is to be 16 feet; take half this or 96 inches for the square, 16 inches on both tongue and blade taken 6 times, giving 11 feet $3\frac{3}{4}$ inches, which, being doubled and added to the side of the octagon, gives the square width.

To Obtain Correct Shape of a Veneer.—Fig. 179 shows a method of obtaining the correct shape of a

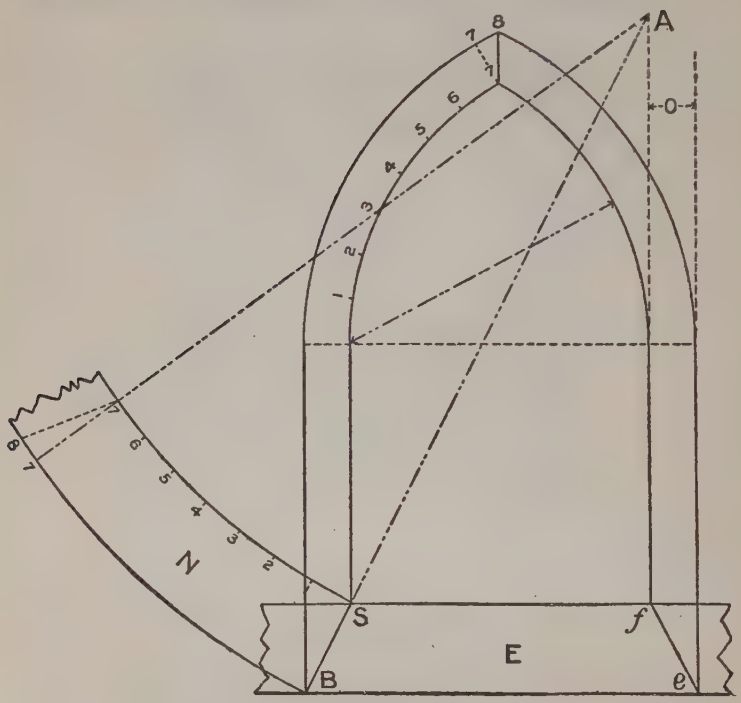

FIG. 179

veneer for covering the splayed head of a gothic jamb. E shows the horizontal sill of the splay, fA the line of the inside of jamb, o the difference between front and back edges of jamb, BA the

line of splay. At the point of junction of the lines BA, fA, set one point of the compasses, and with the radius AB draw the outside curve of N; then with the radius AS draw the inside curve, and N will be the veneer required. This will give the required shape for either side of the head. Its length may be found by spacing off the head as shown by 1,2,3, etc., and space off like amounts on the inner edge of piece N.

Proportional Scales may be readily enlarged by the use of the Steel Square as shown in Fig.180.

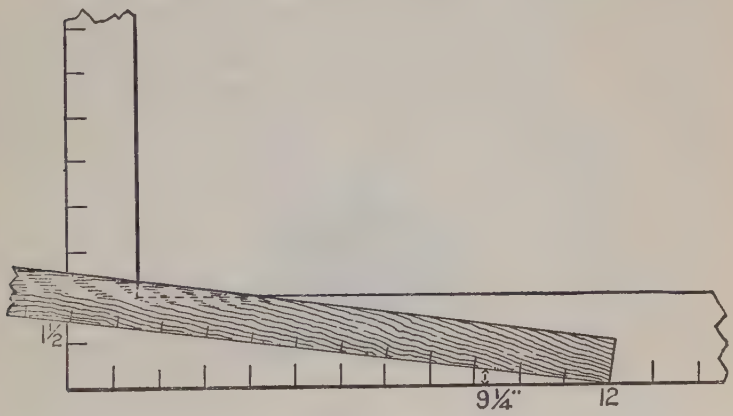

FIG. 180

To Reduce from One Scale to Another.—If a person is drawing a machine on a scale of 1½ inches to the foot, he may simply lay a common rule over the square, touching the 12-inch mark on the blade, and the 1½-inch mark on the tongue; he then possesses a contrivance by which he may easily reduce from one scale to the other. For

instance, if a piece of stick $2\frac{3}{4}$ inches square is to go into the construction, the draughtsman finds the $9\frac{1}{4}$-inch mark on the blade, that is $2\frac{3}{4}$ inches back from the 12-inch mark, and measures square out to the rule. This distance is the reduced section of the stick. A straight mark, drawn on a table or a drawing board, serves as well as a rule.

Part II

POLYGONS AND MITERS. Polygons inscribed in circles — Foundation of miters — Fractional value of decimals — Polygonal figures — Side of polygon being known to find length of perpendicular — To divide a circle into a given number of parts — To measure inaccessible distances by aid of the square — To find the distance across a body of water — To find the height of a tree — To find a required opening in a pitched roof.

Polygons Inscribed in Circles.—In the following table, set the bevel to the pair of numbers under the ploygon to be inscribed.

No. of sides	3	4	5		6		7	8	9	10	11	12
Radius	56	70	74	Side equal			60	98	22	89	80	85
Side	97	99	87	to radius			52	75	15	55	45	44

If we require the radius of a circle which will circumscribe an octagon 8 inches on a side, we refer to column 8, take 98 parts on the blade and 75 on tongue, and tighten the bevel. As the side of a hexagon equals the radius of its circle, the side of an octagon must be less than the radius; hence we shift to 8 inches, that end of the bevel blade which gives the lesser number, in this case, on the tongue of the square, as the 75 parts to which the bevel was set are less than the 98. The required radius is then indicated on the blade.

We will now explain the figures used in stepping round a circle forming inscribed polygons from three to twelve sides: Set bevel or fence to 12 on blade, and the number opposite each poly-

gon on tongue; move to diameter of circle; answer of the side of polygon on tongue.

NAMES.	NO. OF SIDES.	GAUGE POINTS.
Triangle	3	10.40
Square	4	8.49
Pentagon	5	7.05
Hexagon	6	6.00
Heptagon	7	5.21
Octagon	8	4.60
Nonagon	9	4.11
Decagon	10	3.71
Undecagon	11	3.39
Dodecagon	12	3.11

To Divide a Circle into a Given Number of Parts, multiply the corresponding number in column one and the product is the chord to lay off on the circumference. **The side of the polygon being known, to find the radius of a circle that will circumscribe:** Multiply the given side by the corresponding number opposite of polygon in column two.

No. of Sides	Names of Polygons	Angle	Angle of Polygon	Column 1	Column 2
3	Triangle	120	60	1.732	.5773
4	Square	90	90	1.414	.7071
5	Pentagon	72	108	1.175	.8510
6	Hexagon	60	120	Radius	Side
7	Heptagon	$51\frac{3}{7}$	$128\frac{4}{7}$	.8677	1.1520
8	Octagon	45	135	.7653	1.3071
9	Nonagon	40	140	.6840	1.4863
10	Decagon	36	144	.6180	1.6181
11	Undecagon	$32\frac{8}{11}$	$147\frac{3}{11}$	.5634	1.7754
12	Dodecagon	30	150	.5176	1.9323

The Side of a Polygon Being Known, to Find the Length of Perpendicular.—Set bevel or fence to the tabulated numbers below. Example: The side of an octagon is 12, set bevel to 23 on tongue, $27\frac{7}{10}$ on blade. Blade gives the answer.

No. of Sides...	3	4	5	6	7	8	9	10	11	12
Perpendicular ..	9	1 30	13	$27\frac{3}{4}$	$27\frac{7}{10}$	$50\frac{3}{4}$	$28\frac{1}{2}$	$51\frac{3}{4}$	26	
Side of Polygon.	$31\frac{1}{5}$	2	$35\frac{1}{4}$	15	26	23	37	$18\frac{1}{2}$	$30\frac{1}{2}$	14

Foundation of Miters.—We said that it was in the division of the circle that the whole subject of miters is founded, whether regular or irregular, and we believe there is no better way of illustrating this point than as shown in Fig. 181. If there is any one of the illustrations that we feel a little bit prouder of than the others, it would fall to this one.

In this figure are shown a number of the regular polygons. Here they are beginning with the triangle in their order up to twelve, then they skip to fifteen and they could keep on growing in number of sides until their lengths would represent only a very small fractional part of an inch. There is a whole lot of practical information that may be gathered from this illustration.

By dividing 360 (the number of degrees in a circle), by the number of sides in the desired polygon will give the angle that the miters stand with each other, but in order to obtain the angle on the steel square, it is only necessary to divide

180 by the number of the sides in the polygon and the quotient will represent the angle in degrees to use on the steel square to obtain the miter. The blade giving the cut. The figures used on the blade also give the length of the sides of the polygon when the inscribed diameter is one foot. These figures are also used for cuts in roof work.

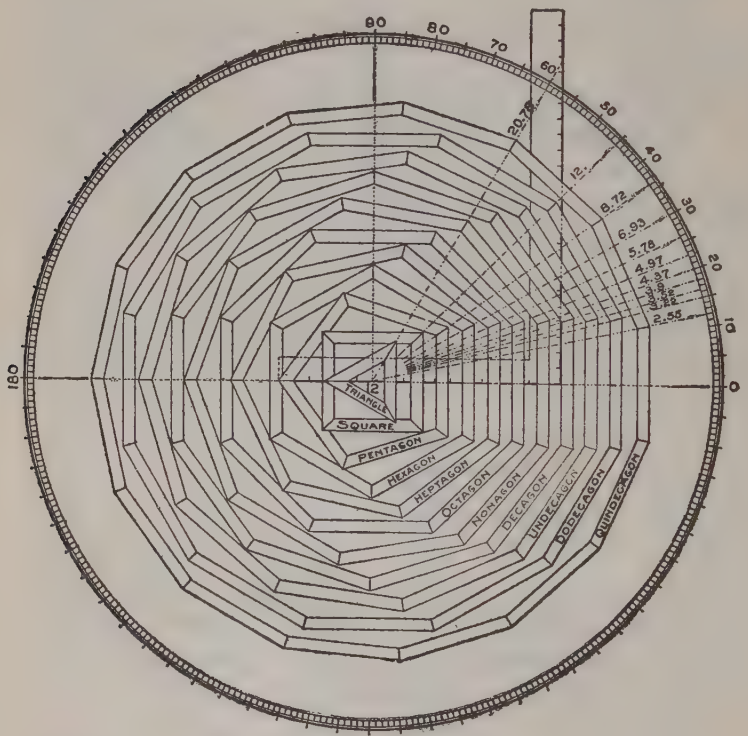

FIG. 181

Fractional Value of Decimals.—The following fractional numbers represent the value of the deci-

mal numbers shown on the degree lines and are the figures to use on the blade as follows: triangle, 20 19-24; square, 12; pentagon, 8 17-24; hexagon, 6 11-12; heptagon, 5 19-24; octagon, 4 23-24; nonagon, $4\frac{3}{8}$; decagon, 3 11-12; undecagon, $3\frac{1}{2}$; dudecagon, 3 5-24; quindecagon, 2 13-24.

These fractional numbers are to the 1-24 part of an inch and are about as near as can be had on the steel square, none of them varying over .02 of an inch. Polygons are known by the number of their sides as per the above names given in their order up to the twelve sided figures, after that, with the exception of fifteen which is called quindecagon, are known as polygons of so many sides.

In some of the encyclopedias the triangle and square are not classed with the polygons, but we see no reason why they should not be, since the rule that applies to other sided figures applies to them also.

The subject of polygons is not as well understood as it should be. It is quite a common thing to call most any kind of a corner aside from the right angle, an octagon corner, due no doubt to the fact of their little demand in practical work, for, aside from the octagon, they are but little used. However, it is well to know them, and to know one is to know them all.

Though many of the illustrations that we have given may never come up in actual practice, they show that when the principles are once undersdood the mechanic will know how to proceed

to apply the square to solve anything pertaining to angles in his line of work. However, we have a few more illustrations that we wish to present before passing them by.

In Fig. 182 is shown an example in line work.

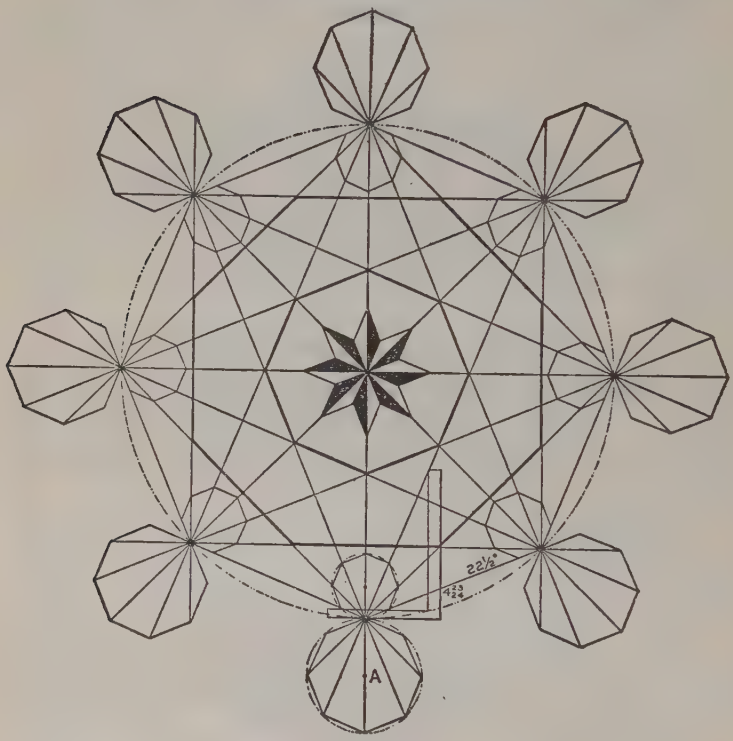

FIG. 182

The figures to use on square are those for the octagon miter and consequently the whole figure runs to the octagon. The eight lines radiating from 12 on the tongue are $22\frac{1}{2}$ degrees apart, the first one intersecting the blade at 4.97, or

practically 4 23-24 inches. The center for this design according to size wanted can be taken at any desired point on the 90-degree or perpendicular line above 12 on the tongue, and where

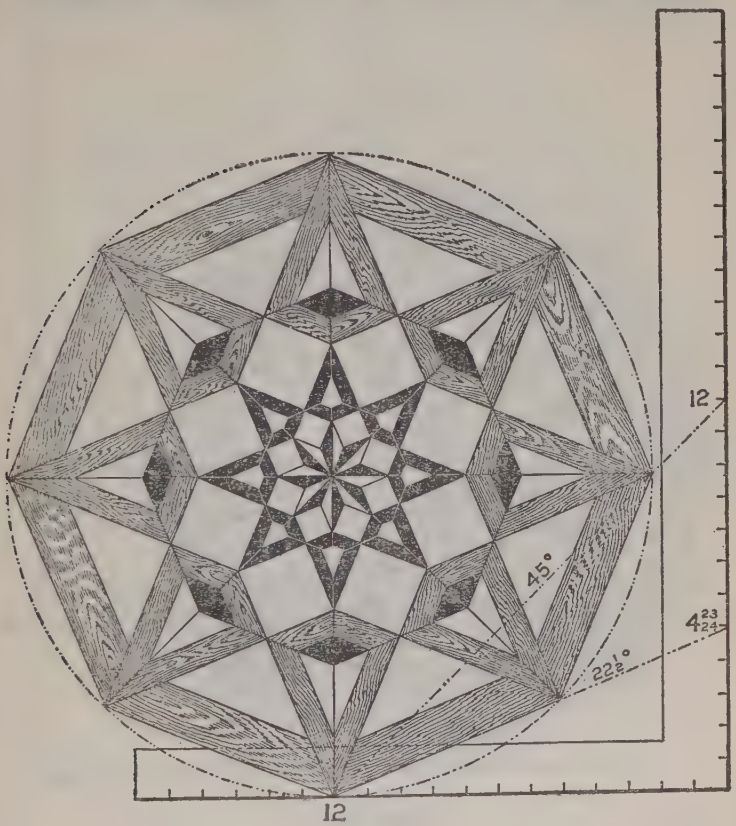

FIG. 183

the circle cuts the first degree line from the tongue determines the length of the sides of the largest octagon contained in the figure. This distance spaced off on the circle. The cross lines are then

drawn and the interior octagons will be formed as shown.

Those on the outer edge are formed by letting the cross lines extend beyond the large circle and from the center line as at A describe a circle cut-

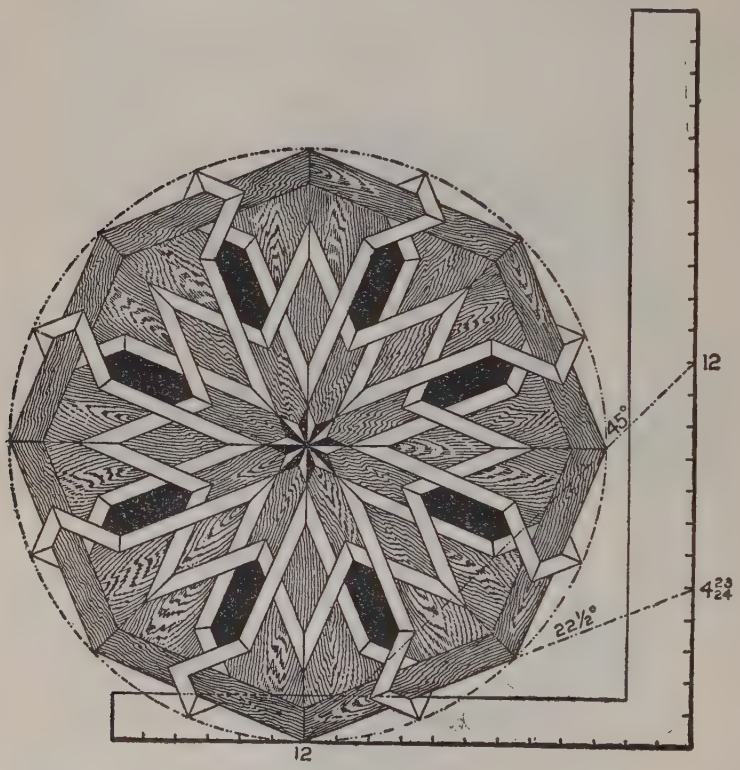

FIG. 184

ting these lines and connecting up the ends will form the octagon as shown.

In Figs. 183 and 184 are shown patterns suitable for parquet or inlaid work. All of the miters

contained in these designs can be had on the 22½ and 45-degree lines and the figures shown on the square when applied will give all of the angles as well as the miters contained in these illustrations.

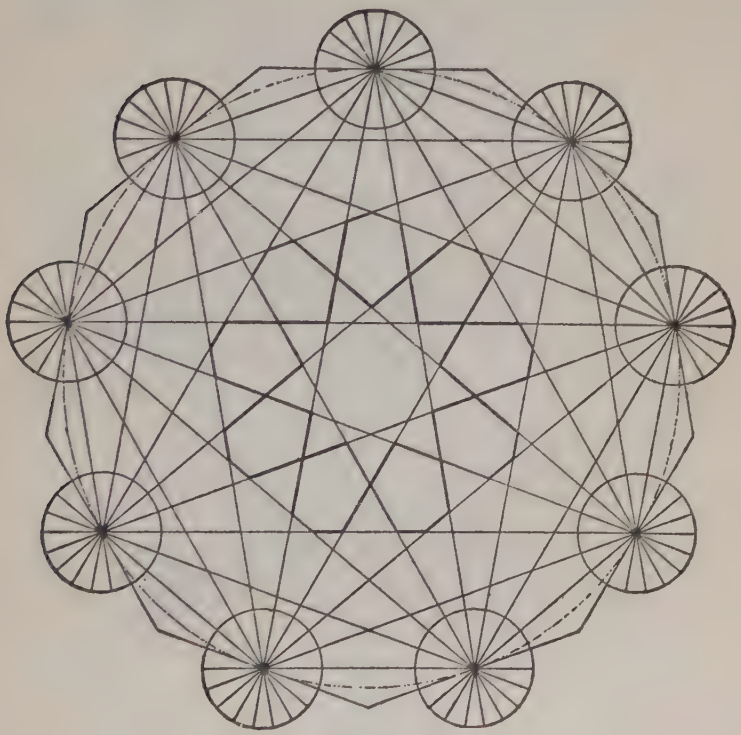

FIG. 185

In Fig. 185 is shown an example in line work for the nonagon or nine-sided polygon. We have not shown the square in connection with this illustration, but the figures to use are for the 20-

degree, because 9 is contained in 180 twenty times. The small circles are divided into eighteen parts because 20 is contained into 360 degrees eighteen times. A further explanation of this illustration would be useless, as it shows for itself.

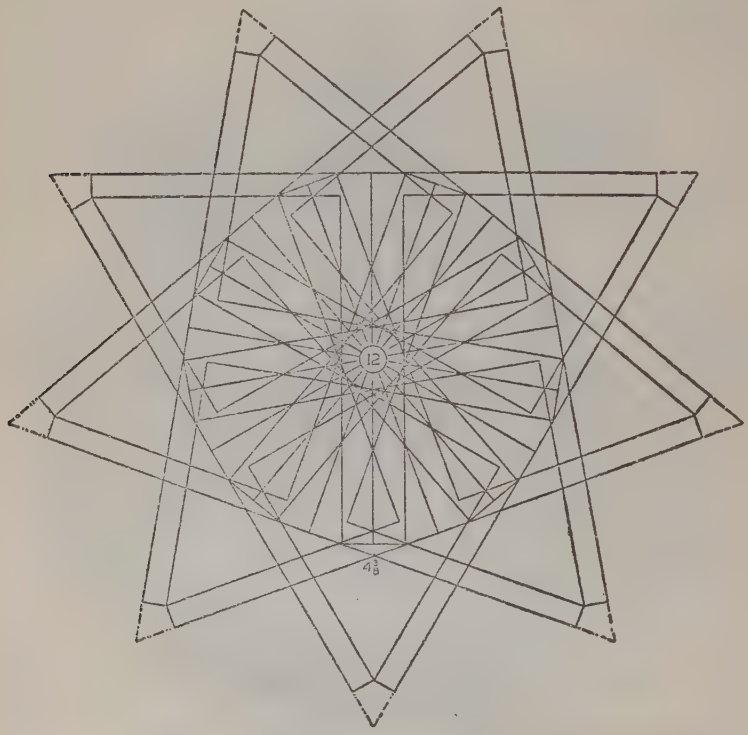

FIG. 186

In Fig. 186 is shown a very pretty design made with eighteen squares. In this the center is at 12 on the blade and the intersection at $4\frac{3}{8}$ on the tongues, which is at the 20-degree line and represents the nonagon as will be seen by the forma-

tion of the tongues at the intersections. By extending the lines from the tongues as shown by the dotted lines will form a nine pointed star.

In Fig. 187 is shown four steel squares placed in pairs as shown with lines radiating from 12 on the tongues and intersecting the blade at 2.12 ($2\frac{1}{8}$); 4.37 ($4\frac{3}{8}$); 6.93 (6 11-12); 10.06 (10 1-12);

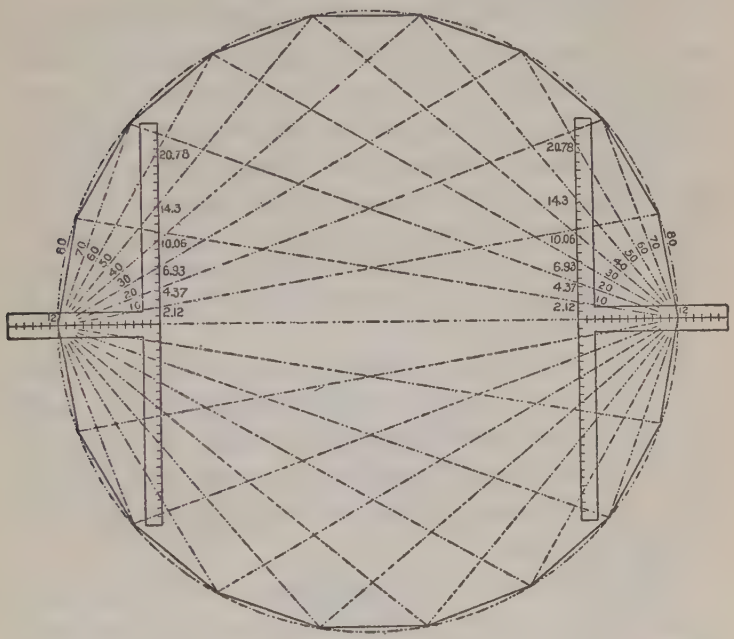

FIG. 187

14.3 (14 7-24); and 20.78 (20 19-24), which represent the degree lines as being ten degrees apart. These lines extend out to meet its complement in other words, for example, the 30 degree intersects the 60 degree line from the opposite side.

The intersections rest at 10 degrees apart on a circle with a diameter equal the distance from 12 to 12 on the tongues of the opposite squares, and by connecting the intersections forms a polygon of eighteen sides. This rule applies to any other polygon, but is not a practical way of solving problems of this kind, because there are simpler ways of arriving at the same result.

With this we close with polygonal figures, as we think we have given enough to show that all work pertaining in any way to angles may be readily obtained by the use of the common steel square.

To Measure Inaccessible Distances by Aid of the Square.—To be able to do this is of the utmost value on many occasions, and a knowledge of the principles involved and how to go about applying them should be a possession of every master workman.

Every mechanic knows that a triangle whose sides measure 6, 8 and 10 forms a true right angle and is the method commonly used in squaring foundations. But how many ever stopped to think what other figures on the square will give the same result?

By referring to trigonometry we find only three places, using 12 inches on the tongue as a basis and measuring to the inches on the blade that do not end in fractions of one inch on the hypothenuse side. They are as follows: 12 to 5 equals 13, 12 to 9 equals 15, and 12 to 16 equals 20.

Now, as we usually use a 10-foot pole to square up a foundation, we find that all of the

above contain lengths greater than our pole, so we must take their proportions. The first con-

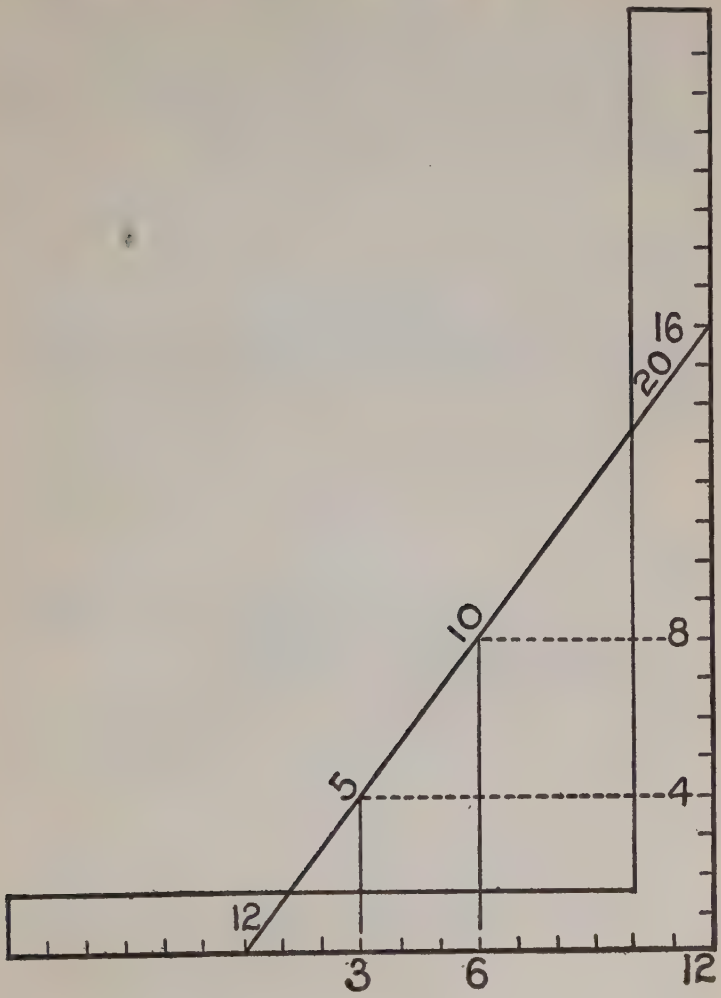

FIG. 188

tain numbers not divisible without fractions, consequently we will pass on to the next. We

find that three is the only number that will equally divide all the numbers with quotients, as follows: 4, 3 and 5, but these are too small to obtain the best results. Now let us examine 12, 16, and 20. They are even numbers, and are divisible by 2 and 4, Fig. 188. If we take half their dimensions we have 6, 8, 10.

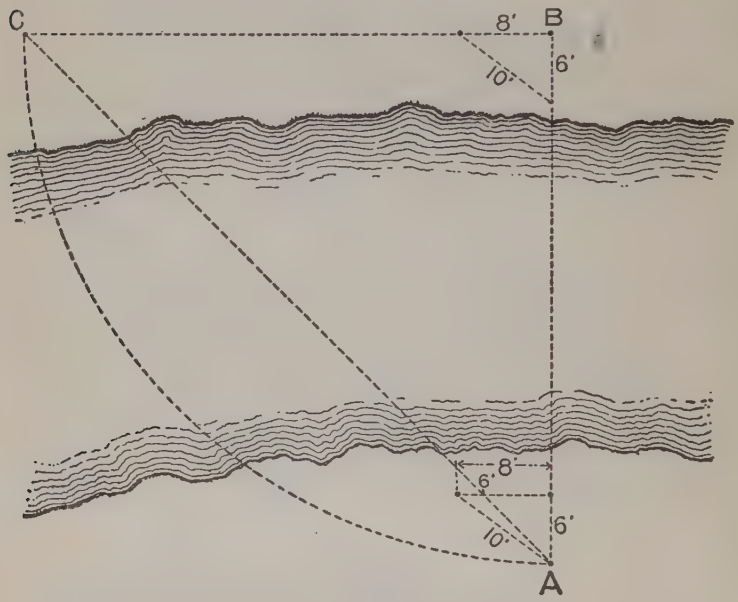

FIG. 189

These being convenient lengths and easily remembered, custom has settled on these figures.

There are other places that 6, 8, and 10 can be used to advantage.

To Find the Distance Across a Body of Water.—Suppose for some reason we want to know the distance across a body of water. We cannot wade

it, neither can we depend on a line stretched across because when it is restretched on an accessible place of measurement we have no way of determining when it is drawn to the same tension. Now, referring to Fig. 189, we want to find the distance from A to B. Lay off the angle of 6, 8, and 10, at both A and B, as shown.

Since the base and perpendicular of a right angled triangle are of equal lengths when the hypothenuse rests at 45 degrees with the former, we measure off 6 feet on the 8-foot side as shown, and this will be the point of sight from A. With a man sighting from both A and B, a third sets the stake at C. Then B C must be the same length as A B. (The arc is shown to prove the accuracy of the diagram.)

By measuring from A and B to the water's edge and subtracting the amount from B C will be given the width of the body of water.

To Find the Height of a Tree.—Fig. 190 illustrates how a tree or inaccessible height can be measured on the same principle with the aid of the steel square. Take a straight-edge and fasten at any of the equal figures on the tongue and blade. Level and set as shown, and the base will be equal to the perpendicular.

Along with the foregoing we quote from another article by Mr. Woods showing some other possibilities of the steel square.

To Find a Required Opening in a Pitched Roof.—An opening for a round pipe in a pitched roof or partition at any angle may be found as shown

in Fig. 191. Here we have a 6-inch pipe intersecting a two-thirds pitch. A line from 12 to 16 on the square represents the pitch. Now with 12 as center and with radius equal to one-half of the diameter of the pipe draw a circle and square up from the tongue to the pitch, as shown at B C.

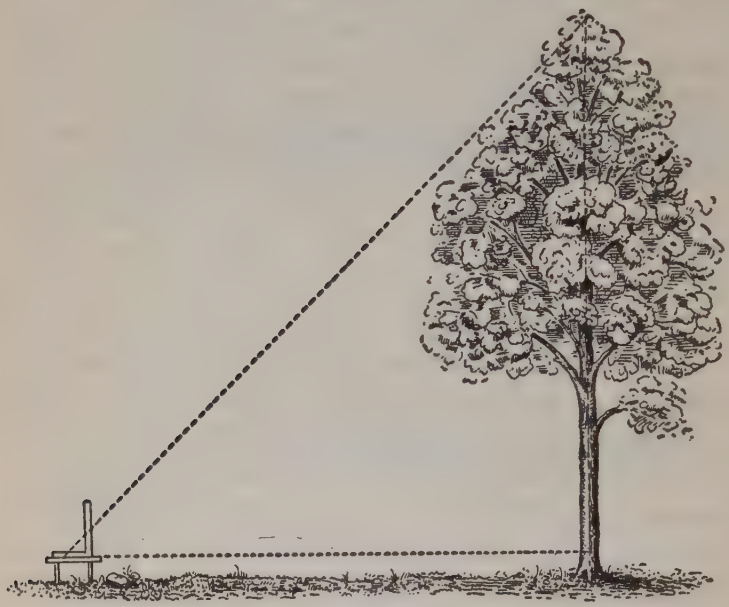

FIG. 190

Then A B represents one-half of the short diameter, and A C one-half of the long diameter. Now to make our illustration more clear we will transfer these lengths to a line at right angles with the tongue, crossing at 12.

There are several ways of finding the corresponding opening. Probably as good a method as any

FIG. 192

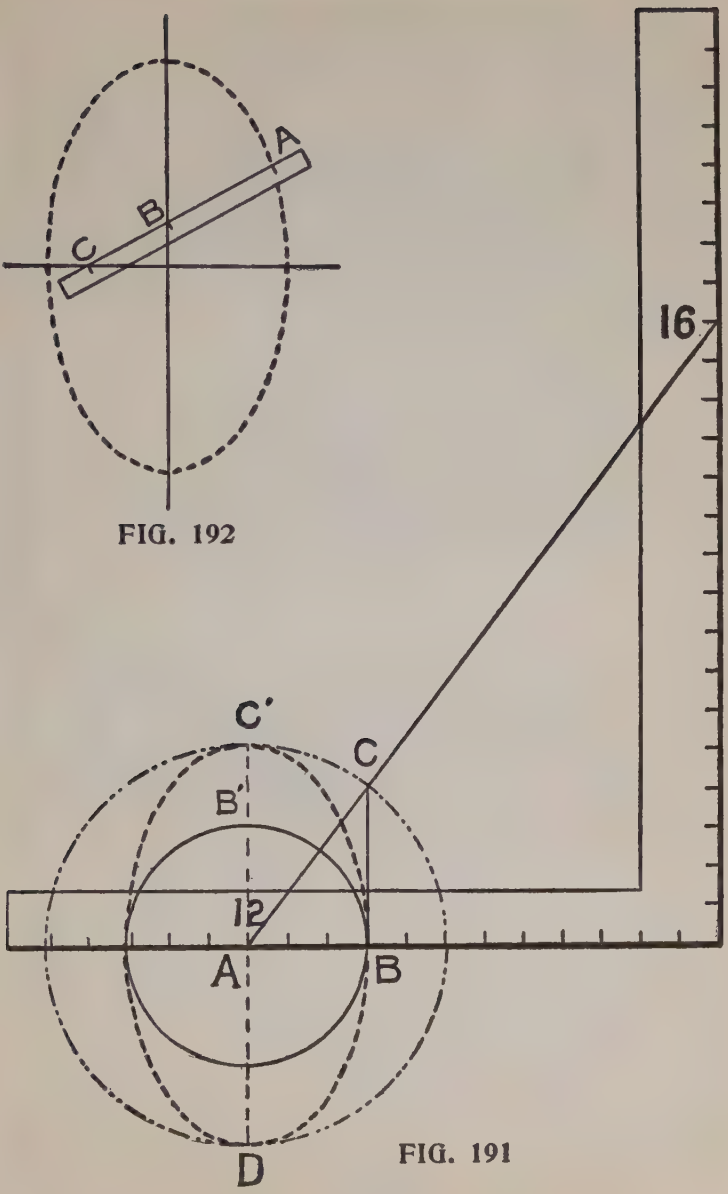

FIG. 191

is that shown in Fig. 192, which is as follows: Take a straight-edge, and on it space off A, B″, C″, as shown in Fig. 191. Now draw a line equal to the long diameter, C D, and bisect it at right angles, and to these lines apply the straight-edge, as shown in Fig. 192. Always keeping B C on the lines and marking at A will describe the required opening. The steeper the pitch the longer will be the required opening. In Fig. 193 is shownthe same formula, but with the one-third pitch

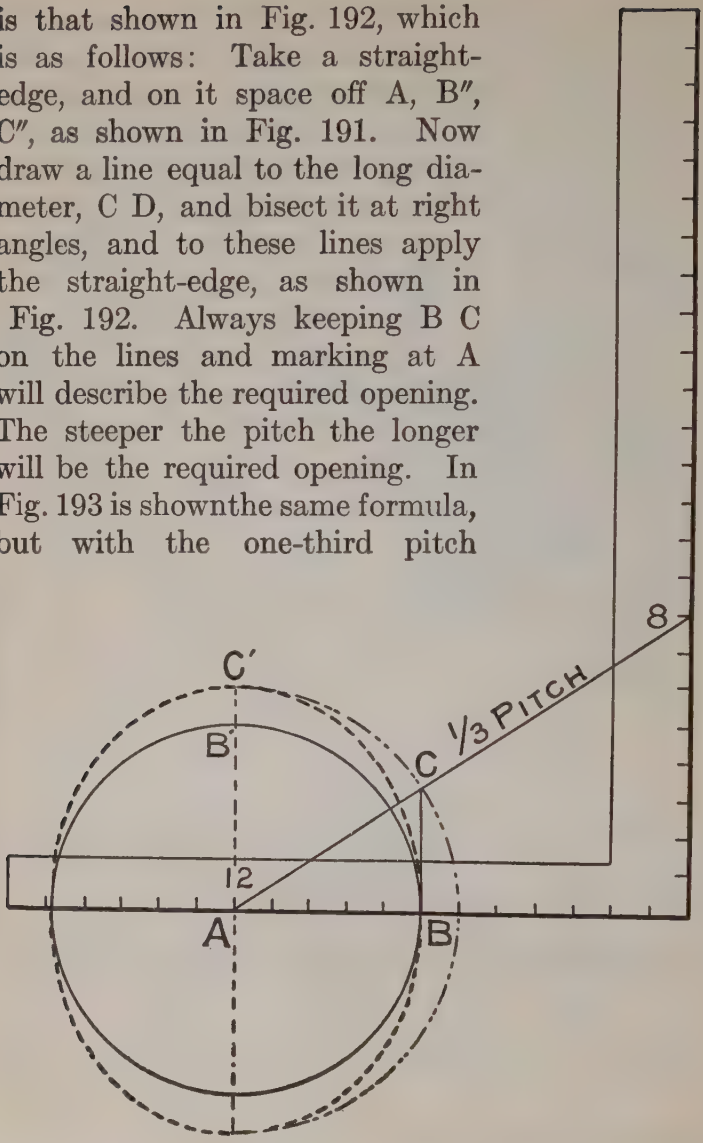

FIG. 193

and a 10-inch pipe. Fig. 194 shows another method of obtaining the opening, which is as follows: Lay off the run, rise and pitch, and with one-half the diameter of the pipe as radius, with the pencil point resting at 12, and center on run, draw a semi-circle. Divide the diameter into any number of spaces and through these run lines at

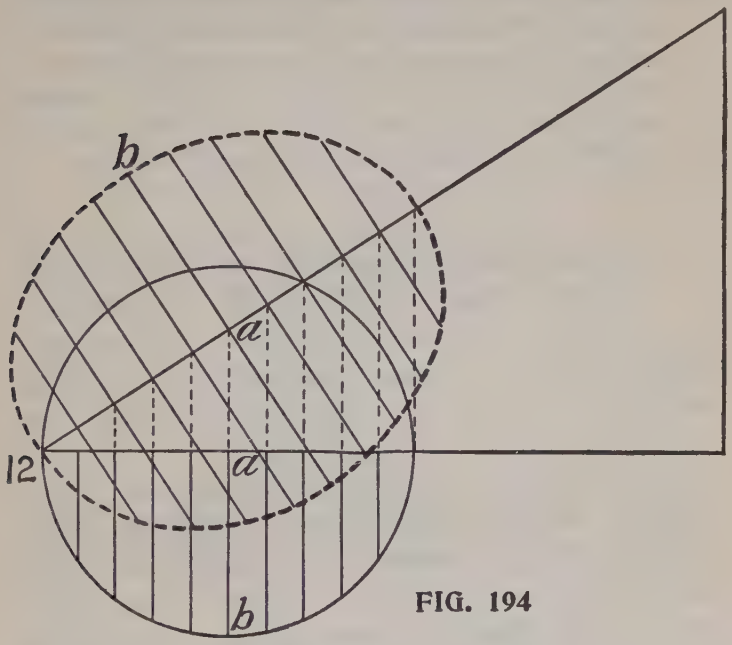

FIG. 194

right angles with the run from the circle to the pitch. At point of intersection on the pitch draw lines on either side at right angles and on this measure equal the length of the corresponding lines of the semi-circle, as at A B. Run an off-hand curve, touching these points, and you will have the required opening.

Part III

PITCHES AND ROOF FRAMING. Pitches and degrees — Pitch lines and reversed pitch — Steep pitches — What constitutes a full pitch — To cut rafters with the square — Length of jacks — Simplest way to frame a roof — Additions and porches — Cuts, lengths and bevels of rafters — Plan of roof — Unity rule — Measurement line of all jacks, hips and valleys — Backing line for octagon hip — For a triangular building — Tail end cut of hip or valley — Side cut of jacks — Octagon jacks — Plumb cut of rafters — Side cut of hip — Lengths, cuts and bevels of common rafters — Lineal board measure — Length of rafters for odd runs.

Examples and Explanations on Roof Framing.—The following examples and explanations on roof framing are simple and easily understood, and cannot fail of being valuable to the young mechanic who aspires to become an expert roof framer.

Roof framing can be done about as many different ways as there are mechanics. But undoubtedly the easiest, most rapid and most practical is framing with the square. The following cuts will illustrate several applications of the square as applied to roof framing, and all who are interested in the subject can, by giving it careful study, be able to frame any ordinary roof the mechanic comes in contact with.

Pitches and Degrees.—Fig. 195 is an illustration that could well be given much thought and study. It not only gives the most common pitches, but

also gives the degrees. Most carpenters know that half pitch is 45 degrees, yet few know third-pitch is nearly 34, and quarter-pitch about 27 degrees.

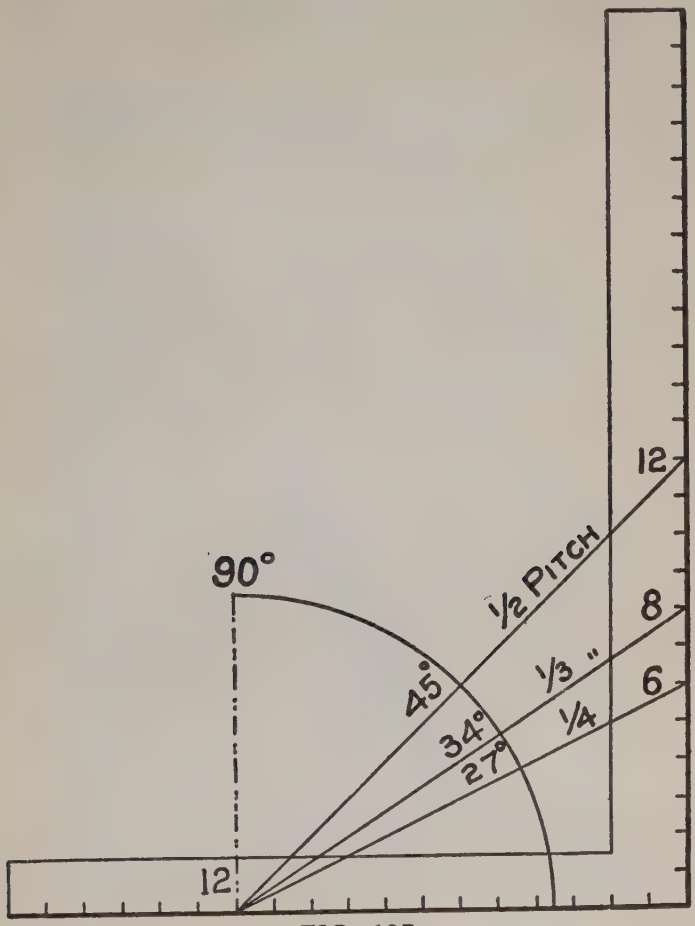

FIG. 195

A building 24 feet wide (as the rafters come to the center) has a 12-foot run and half-pitch, the

rise would also be 12 feet, and the length of the rafter would be 17 feet (the diagonal of 12). Length, cuts, etc., could all be figured from the one illustration.

Pitch Lines and Reversed Pitch.—In the illus-

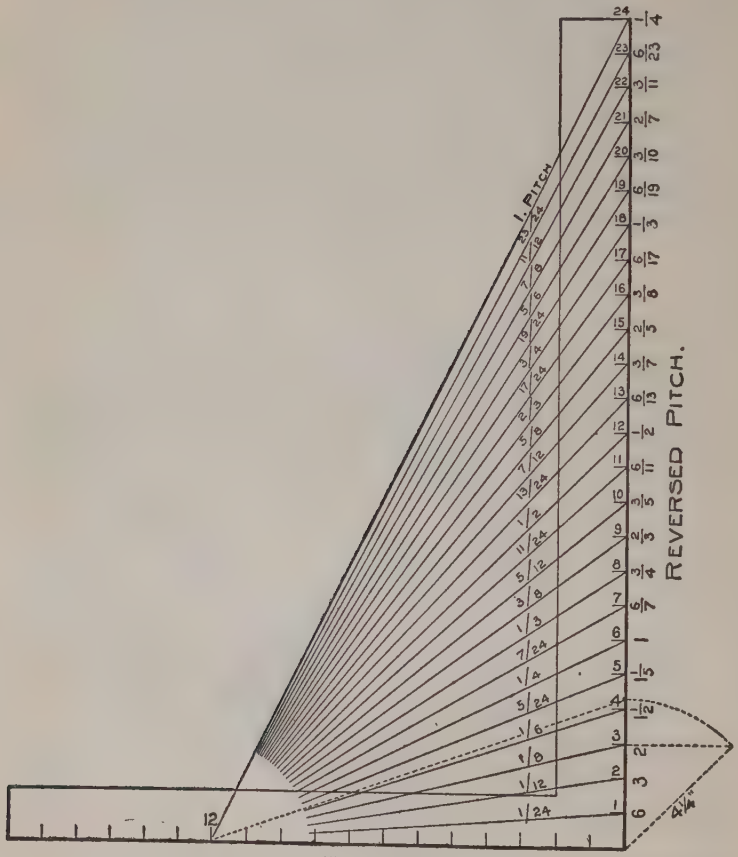

FIG. 196

tration at Fig. 196 we show the pitch lines up to the full pitch, also the reversed pitch. That is,

by letting the blade represent the run and the tongue the rise. The length of the pitch lines in that case becomes the length of the rafter for a one-foot rise to the inches in run taken on the blade. The reader will notice that several of the reversed pitches are to be found in the first column, though representing some other pitch, that is, the full pitch becomes the one-quarter pitch when reversed. The three-quarter, same as one-third, the two-thirds as three-eighths. The one-half being at the half-way point between horizontal and perpendicular, remains unchanged.

From this it will be seen that the low pitches become very steep when reversed. Thus, the one twenty-fourth pitch becomes 6 pitches or has a rise of 12 feet to a one-foot run. The one-twelfth pitch has a rise equal to 3 feet to a one-foot run, etc.

For the corresponding lengths of the hip or valley for these pitch lines, add five-twelfths to the run of the common rafter, which is the same as taking the diagonal of a square, whose sides equal the run as shown by the dotted lines for a 3-inch run, which in this case is equal to $4\frac{1}{4}$ inches, and measure diagonally across to 12 on the tongue will give the length per scale for the hip for each foot in rise of the common rafter. This, of course, reverses the seat and plumb cuts, on the square, and also causes a calculation that can be simplified by always reckoning the run on the tongue of the square regardless of the pitch given the common rafter.

Steep Pitches.—In Fig. 197 is shown how to apply the steel square for steep pitches. In this

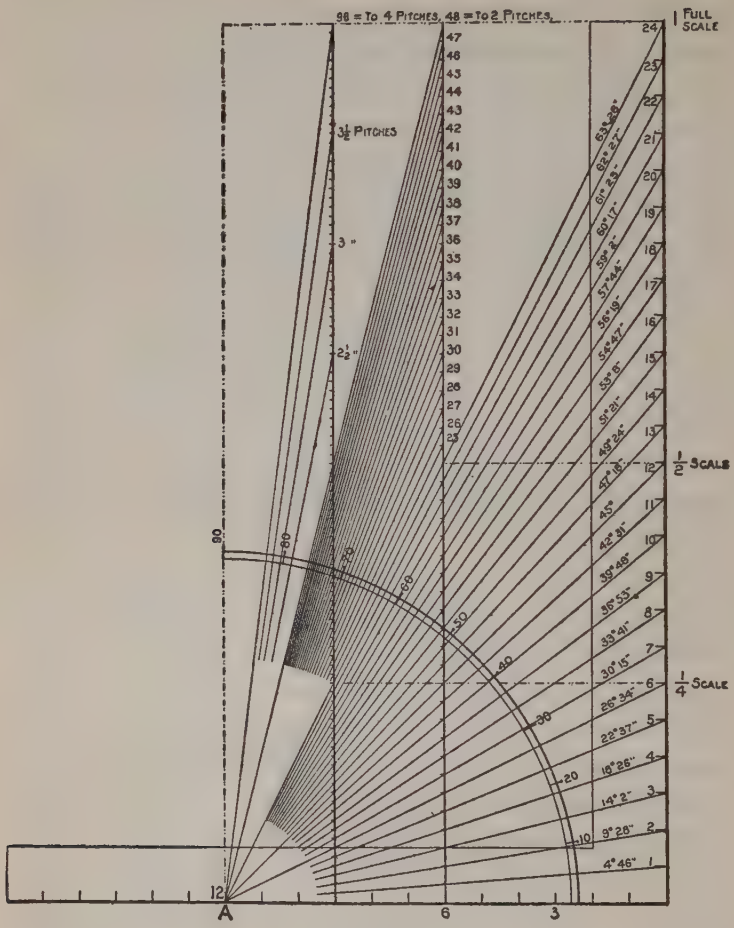

FIG. 197

illustration we show all of the pitch lines up to 96-inch rise to one foot in run, or four full pitches.

The pitch lines shown in connection with the steel square, represent the same up to the full pitch. Now leaving the pitch lines as they are and just imagine that we slide the square to the left until the 6-inch mark on the tongue rests at the starting point A, and it will be seen that the scale has been reduced one-half; in other words, the pitch lines would intersect the blade at the ½-inch marks, thereby permitting of a 48-inch rise to a one-foot run. The 48 being double 24 (the span) is therefore equal to two full pitches. If it is necessary for a still further reduction, just slide the square again to the left until the 3-inch mark on the tongue rests at the starting point. The pitch lines will then intersect the ¼-inch marks on the blade and permitting of 96 inches rise to one foot in run, or four full pitches. These, of course, are unusual, but the rule that applies to the common pitches, that is, those most generally used, necessarily applies to these.

For the corresponding hip or valley for the pitch lines above the full pitch, use 8½ on the tongue for the ½ scale and 4¼ for the ¼ scale. It will be seen that by the reduction in the scale, taken on the tongue of the square, permits of many pitch lines on the blade, thereby increasing the rise to any desired height.

In this illustration we give the degree and minutes of pitch for the common rafter up to the full pitch. To find the same for the reversed pitch lines, it is only necessary to subtract the degrees here given from 90 degrees. Thus—to

find the degrees for the full pitch when reversed, subtract 63° 26″ from 90°. To do this it must be remembered that it is necessary to borrow one degree from ninety and that one degree is equal to 60″ and should be expressed thus, 89° 60″—63° 26″=26° 34″, which will be seen is the same as that for a 6-inch rise or the one-quarter pitch. (Also see Fig. 196.) By referring to the degree scale in Fig. 197, the degree of the other pitch lines can be very nearly arrived at by scale as shown by the quadrant.

We trust we have made it clear that by using the tongue of the square to represent the run, instead of the blade as is the custom of most other writers, permits of the pitch lines up to the full pitch. Then again the blade being longer than the tongue gives a greater range of angles without reduction from the full scale to obtain the side cuts of the jacks and hips, which with this system are always on the blade, thereby helping to more readily fix on the mind the different cuts and where they belong on the steel square.

What Constitutes a Full Pitch.—We find builders differ as to what constitutes a full pitch, and this is not to be wondered at, because writers on the subject differ. There are a number of books on the market, one of which has reached considerable sale, a copy of which is now before us, illustrating the pitch lines on the square similar to that shown in Fig. 196, but designating each line as a whole, as 1, 2, 3, etc., pitch up to twenty-fourth pitch. Yet the universal theory of

12 and 12 taken on the square gives the seat and plumb cuts for the one-half pitch is the accepted practice and must prevail. What is true in this case must naturally follow when other figures are taken on the blade. Comparing it with the above method, twelve whole things would only be one-half of a thing. Six whole things are one-fourth of a thing, etc. In saying this we do not mean to be understood that we are trying to introduce some new fangled theory about pitches; far from it. We take it as is usual in the accepted practice and analyze it. In other words, if there is such a thing as one-quarter, one-third, one-half, three-quarter pitch, etc., then there must be a full pitch. This is arrived at by reckoning the rise given the common rafter in proportion to the span or width of the gable. It is therefore a full or a whole pitch when the rise equals the span. Taking it on the square;—the run being 12 inches, the span must necessarily be 24 inches and since the blade is 24 inches long, then the figures on that member are to the pitch as to its own (blade) length, and that is all there is to it. Then a line drawn from 12 on the tongue to each of the inch divisions on the blade will represent as many fractional pitches. These lines diverge from one another taken on the vertical line at the rate of one-twelfth of an inch to each inch in run. So at the twelfth-inch back from the starting point, the lines are 12-12 or one inch apart and intersects the blade at the inch divisions and represents the full scale for a one-foot run for all of the pitch

lines. Now let us look at the figures on the blade of the square, as shown in Fig. 198, and see what

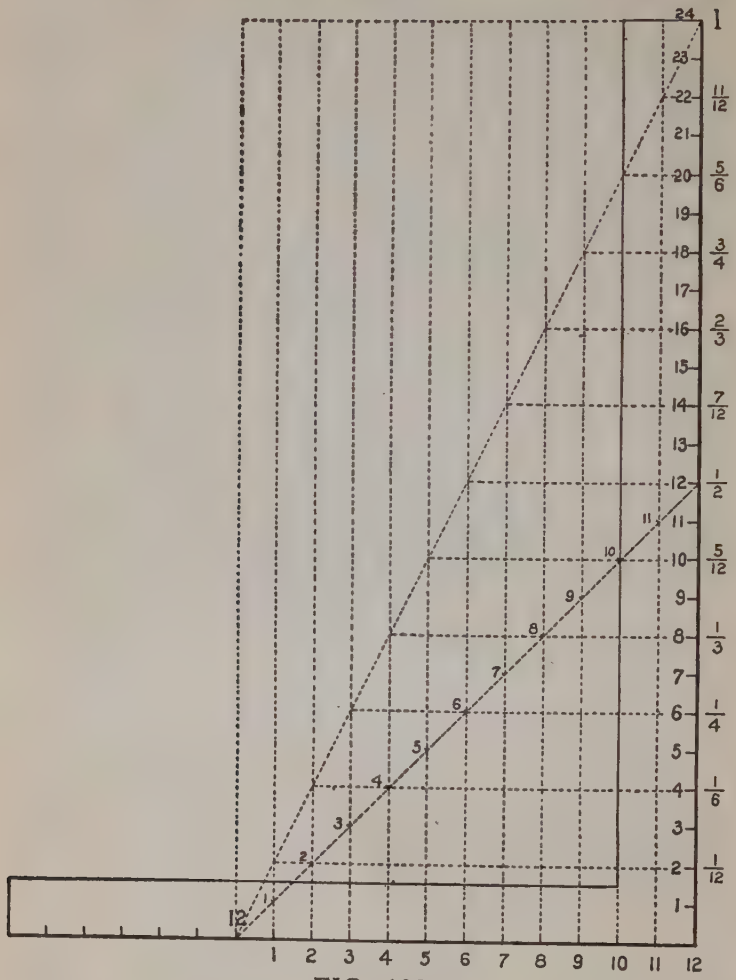

FIG. 198

relation they bear to those on the tongue. These figures as before explained represent the rise

given the common rafter to a one-foot run. The fractional numbers to the right of the blade

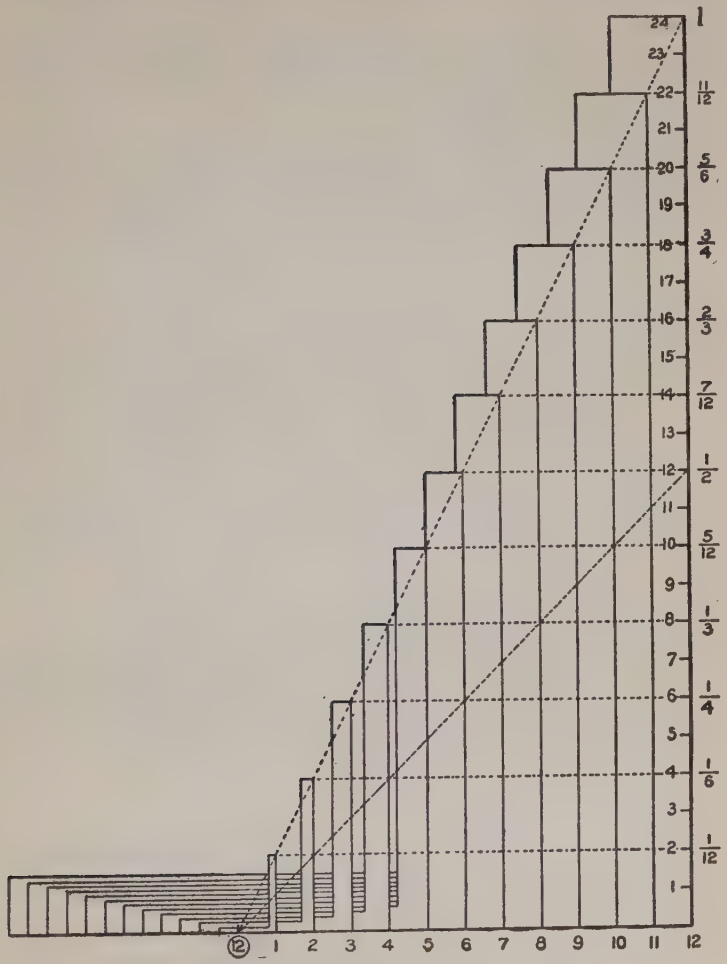

FIG. 199

represent the proportion of the pitch. Now follow the horizontal dotted lines from these figures

over to the full or one pitch, thence down to the desired pitch and the figures at this point and those in the run taken on the square will be to the same proportion as those for the full scale, but at different points on the square. For illustration see the one-half pitch.

In Fig. 199 is shown a similar drawing, but in this the squares are reduced in size ranging from one-twelfth up to the full size square. The fractional figures that denote the pitch, also denote the size of the squares in proportion to the full size square and these, if divided into as many parts as the full size square would give just the same results as far as the cuts and bevels are concerned, as will be seen by taking the one-half pitch, the line passes at the half-way point on the blade of all of the squares and consequently would give like results. However, squares are not made other than with the standard measurements. This illustration is given simply to illustrate proportional scales and that the size of the square would make no difference in the results so long as the divisions are to the ratio of the standard scale of measurements.

But we are not through talking about Fig. 198. In this illustration the vertical dotted lines from each inch in run represent the blade and the figures where the one-half pitch line crosses these lines and that denoting the run will give the seat and plumb cuts for the common rafter, as 1 and 1, 2 and 2, 3 and 3, etc. Now let us apply this to some other pitch. For an example we will

take three-eighths pitch, as shown in Fig. 200. Remember the full pitch regulates the scale in proportion to the full scale for any rise under 24 inches. The full scale for the $\frac{3}{8}$ pitch is 12 and 9. Why? Because 9 is $\frac{3}{8}$ of 24.

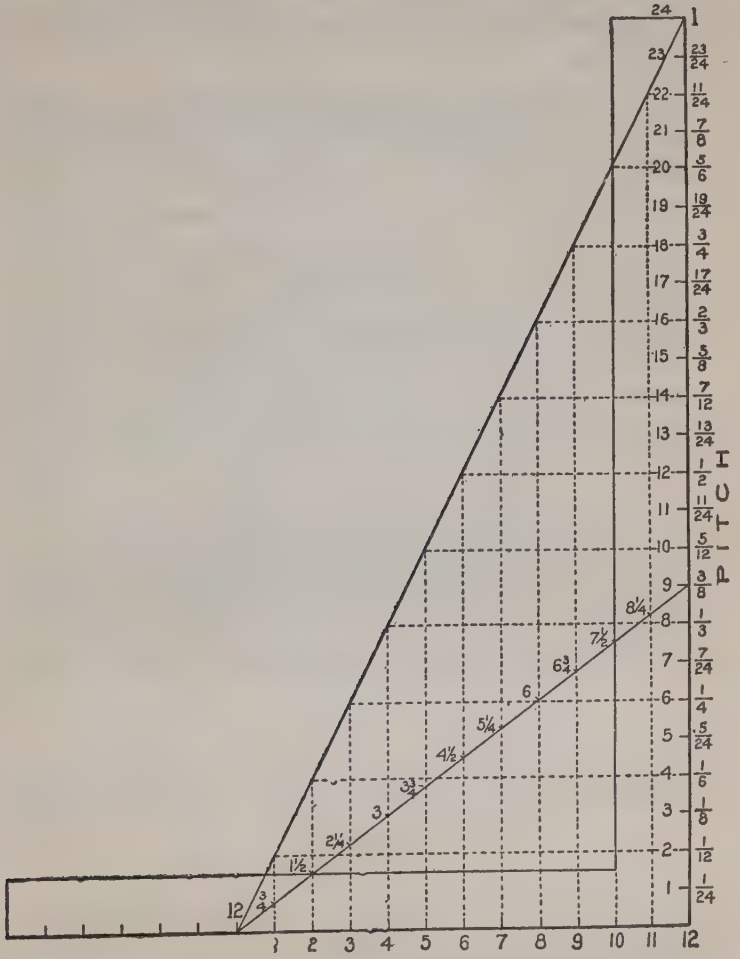

FIG. 200

To find the $\frac{1}{4}$ scale for the above pitch, take 6 on the blade and follow the horizontal line to the left till it intersects the one pitch, thence vertically down to the $\frac{3}{8}$ pitch, and it will be found that this intersection is at $2\frac{1}{4}$ inches above 3 on the run, and it will be seen that these figures are $\frac{1}{4}$ that of 9 and 12.

For the 5-12 scale, proceed in like manner, starting from 10 on the blade. The intersection on the pitch line will be $3\frac{3}{4}$ inches above 5 on the run. Thus every inch of the blade's length represents a distinct scale, and these are subject to many more scales. If the blade of the square be divided in twelfth inches, each division will represent a scale, making in all 12 multiplied by 24, equals 288 different scales; but these divisions run into intricate fractions for the rise, and only one-half of the runs will end in twelfths of an inch. The other half will end in twenty-fourths, but all of these scales will be in the same ratio as that given for the full scale, and consequently give the same result as far as the angles are concerned. However, it is better to use the full scale when

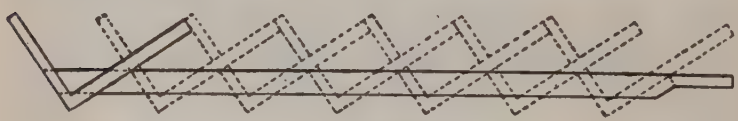

FIG. 201

same can be done, as it is handier and insures more accuracy in the work.

To Cut Rafters with The Square.—Fig. 201 il-

lustrates a way to cut rafters with a square. A roof 14 feet wide would have a run of 7 feet, third-pitch would rise 8 inches to every foot run. Therefore, place the square on 8 and 12 seven times, and you have the length and cuts.

Fig. 202. For the octagon rafter, proceed

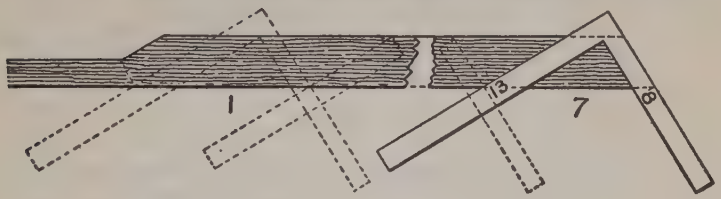

FIG. 202

same as for common rafter, only use 13 for run (in place of 12 for common rafter).

Fig. 203, hip or valley rafter. As these rafters run diagonal with the common rafter and as the

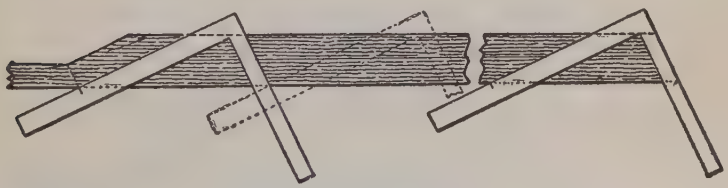

FIG. 203

diagonal of one foot is practically 17 inches, use 17 for run, and proceed the same as for common rafter.

Length of Jacks.—If there are to be five, divide the common rafter into six equal parts, use that for a pattern, and it gives the length very nicely. But that will not always work. To get all the dif-

ferent lengths might at first, look difficult even to many good mechanics, but it is very simple as

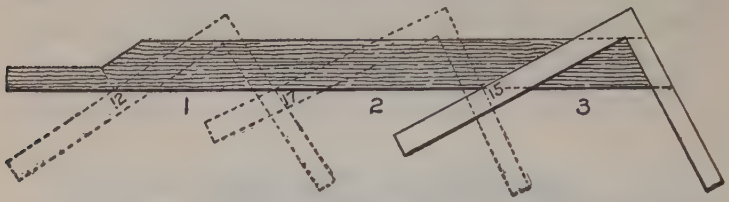

FIG. 204

illustrated in Fig. 204. If the first jack was one foot from corner, apply the square the same as for common rafter, and it gives length and cut (mark the length for starting point on next), and if it is 17 inches from the other, move the square up to 17, if the next is 15 move up to 15 and so on.

Fig. 205. The side cut of jack to fit hip, if laid down level would, of course, be square miter,

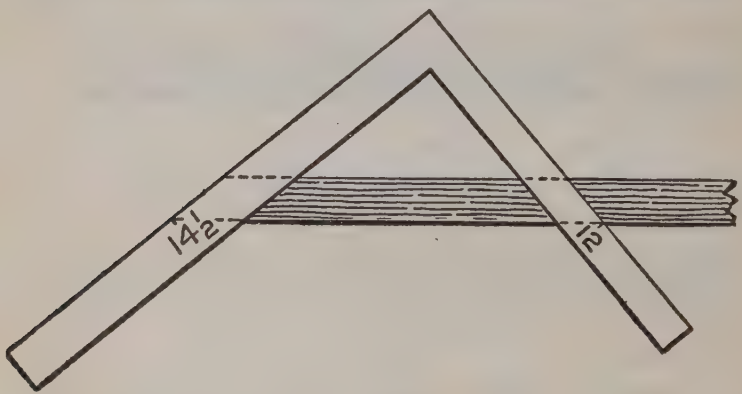

FIG. 205

but the more the hip rises the sharper the angle. Measure across the square from 8 to 12, and it is

nearly 14½, which is the length of rafter to one foot of run. Length and run, cut on length, gives the cut.

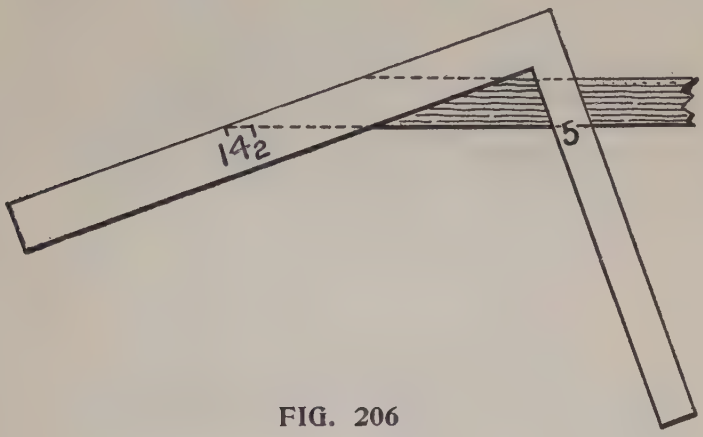

FIG. 206

Fig. 206, octagon jack. As the octagon timer on level surface is 5 and 12, it must raise

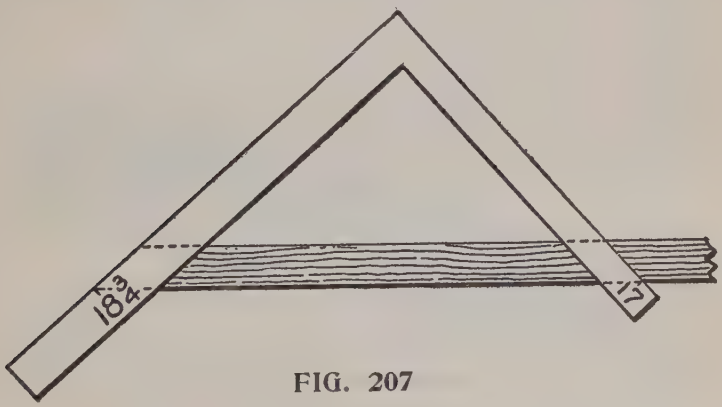

FIG. 207

same as common jack, and is, therefore, raised to length, or 14½, and 5 cut on length.

Fig. 207, hip rafter, is also length and run, cut on length.

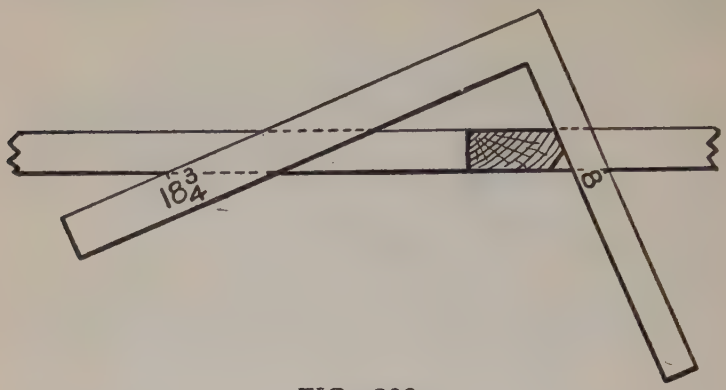

FIG. 208

Fig. 208. To bevel top of hip take length and rise and mark on rise.

Fig. 209 is another practical way, which is

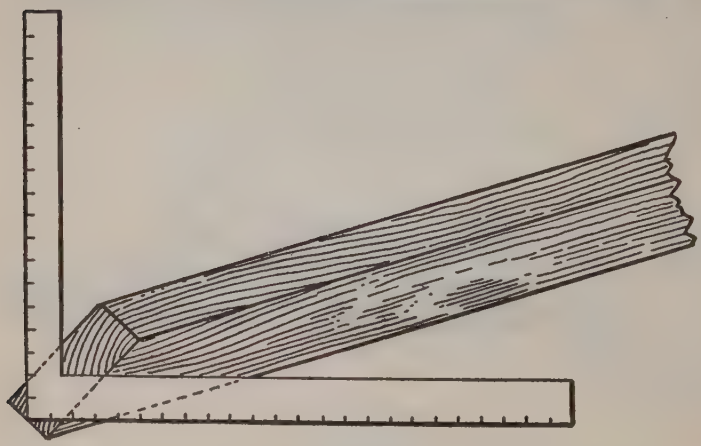

FIG. 209

simply to lay the square on heel of hip. The illustration explains itself.

Simplest Way to Frame a Roof.—Perhaps the most practical way of all to frame a roof, the simplest to understand, easiest to remember, and most rapid to apply, is simply to always take the rise and run, measure across the square which gives the length. Rise and run gives cuts, so you have it all.

Fig. 210 illustrates a roof 25 feet wide and a

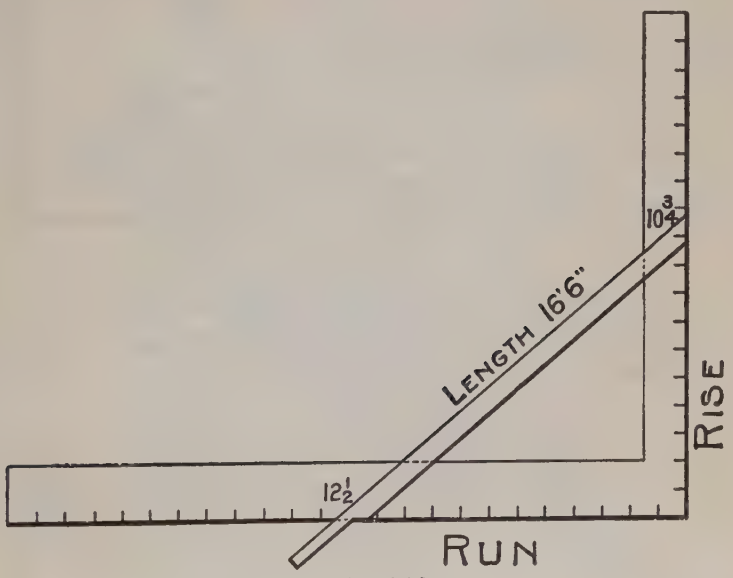

FIG. 210

rise 10 feet 9 inches, run 12 feet 6 inches. Measuring across the square from $10\frac{3}{4}$ to $12\frac{1}{2}$ gives $16\frac{1}{2}$, or 16 feet 6 inches is the length of rafter.

Fig. 211. If the run of common rafter is $12\frac{1}{2}$, the run of the hip will be diagonal of $12\frac{1}{2}$, which is 17 and 8-12, as is plainly illustrated.

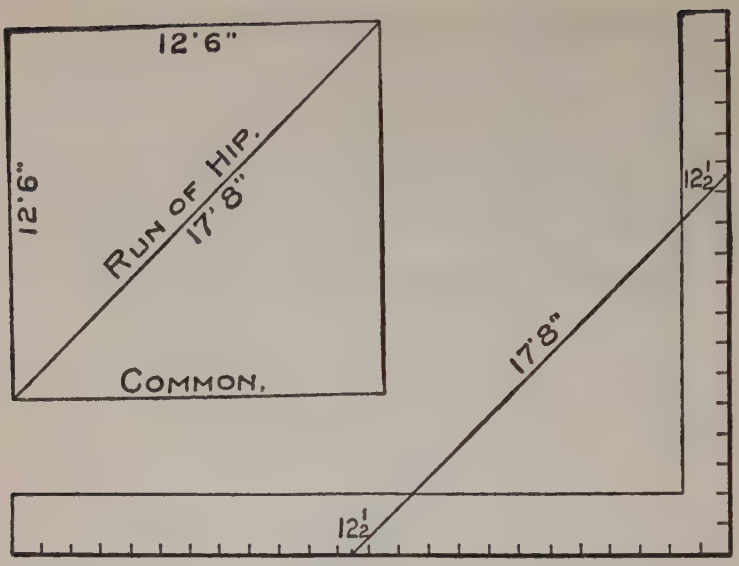

FIG. 211

Fig. 212. As the rise is $10\frac{3}{4}$ and run 17 and 8-12, the length will be 20 feet and 2 inches.

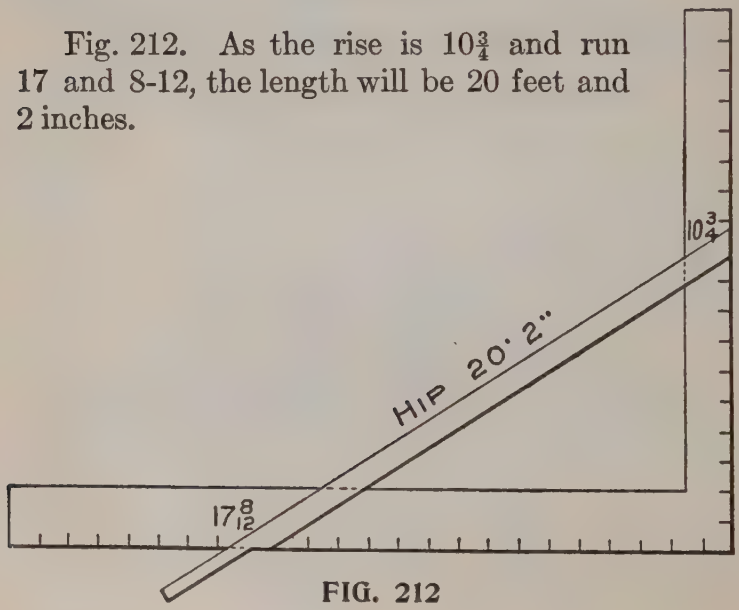

FIG. 212

Additions, Porches, etc.—Fig. 213. When a roof must go to a certain height to strike another building at a given point, as in additions, porches, etc , don't forget in getting the rise from plate to

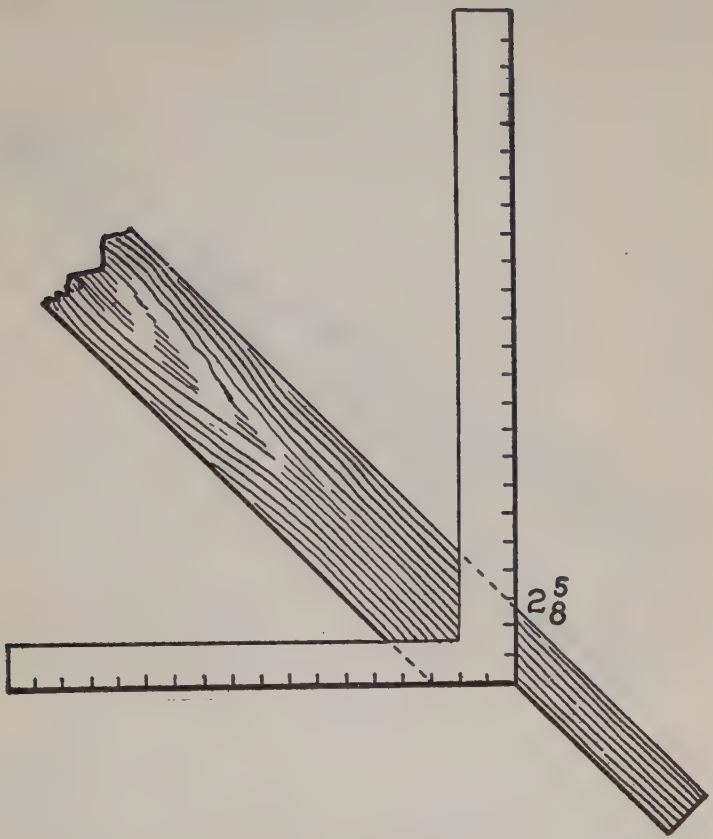

FIG. 213

given point to allow the squaring up of heel as illustrated; and also remember to allow for ridge whenever one is used.

Fig. 214 illustrates the cut of top of quarter-pitch rafter to lay on top of roof just mentioned. To apply square, first lay it on 12 and 6, which is quarter-pitch, and gives plumb-cut. From plumb-cut lay off pitch of main roof $10\frac{3}{4}$ and $12\frac{1}{2}$, which gives cut.

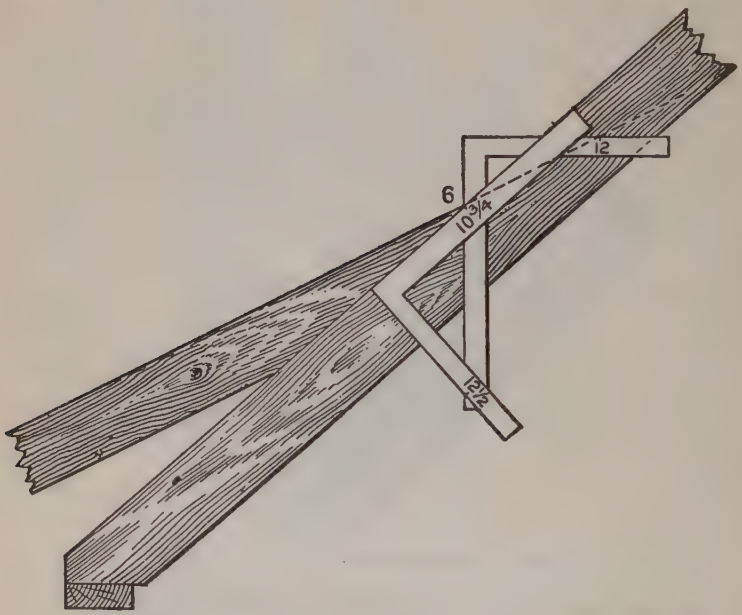

FIG. 214

It is quite clear that a common rafter becomes a hip for a building of less span, as will be seen by referring to Fig. 215. Here the common rafter for a 12-inch run becomes a hip for an $8\frac{1}{2}$ inch run. A hip for a 12-inch run becomes a common rafter for a 17-inch run. Therefore, the same rule must apply to both, that is, the tangent (commonly called

run) and rise, taken to scale on the square will give the seat and plumb cuts. The tangent and the length of the rafter taken to scale on the steel square will give the side cut for the hip to rest

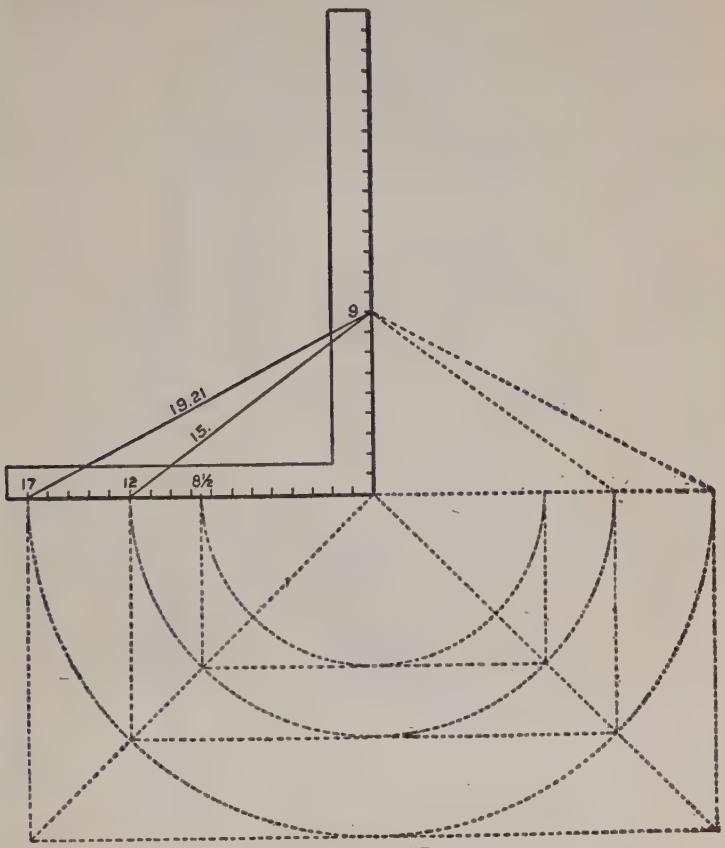

FIG. 215

against the ridge tree. Cut on length. The same applies for the common rafter, which gives the side cut of the jack to rest against the hip or valley.

Taking the full scale for the hip as compared with the common rafter, it is practically 17 on the tongue and the length of the hip for a one-foot run of the gable taken on the blade, and the latter will give the cut. If 12 is used on the tongue for

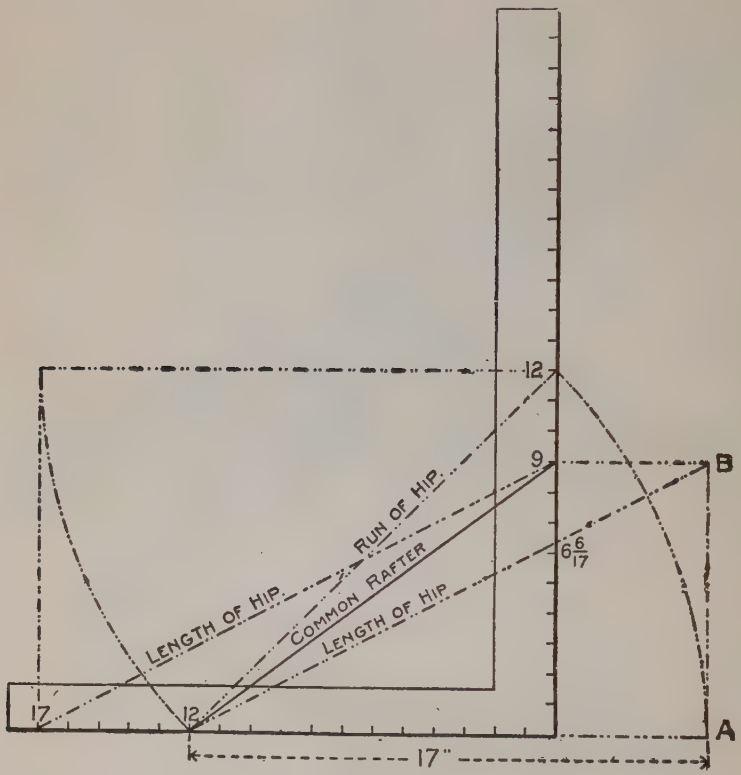

FIG. 216

a foot run of the hip, its rise would necessarily be less than for the same run of the common rafter, as will be seen on Fig. 216. In this is shown the corresponding difference for the $\frac{3}{8}$ pitch. The

diagonal line from 12 to 12 represents the length of the run of the hip, and this taken on a continued line of the run of the common rafter, as at "A," and erect the rise equal to that of the common rafter as at "B," and it will be seen a line from this to 12 on the tongue passes at 6 6-17 inches on the blade; because the common rafter having a rise of 9 inches to one foot, for one inch, it would only have 9-12 of an inch, while the hip would only have 9-17 of an inch to one inch. Then for 12 inches it would be 12 times 9-17, equals 108-17, or 6 6-17 inches. Therefore, 12 on the tongue and 6 6-17 on the blade will give the same result as 17 on the tongue and 9 on the blade, but as the former method necessitates a calculation that ends in fractions —fractions not given on the square—it is better to use the latter method because it obviates the fractions. In this illustration is also shown why 17 is used on the tongue, which is simply taking the length of the run of the hip on that member, as shown by the course of the dotted lines. A line from this point (17) to the rise of the common rafter, represents the length of the hip or valley for a one-foot run to correspond with that for the common rafter and is parallel with the line from 12 to "B," as in the former method. Thus 17 is a standard number on the tongue for the hip or valley, just the same as 12 is used for the common rafter, the rise remaining the same avoids computations and greatly simplifies the work. While 17 is used on the tongue to obtain the cuts, the actual measurement is a little less than 1-32 of an

inch of being 17 inches. This, however, is too small to consider, but the lengths of the rafters for accuracy should be reckoned from 16.97 inches.

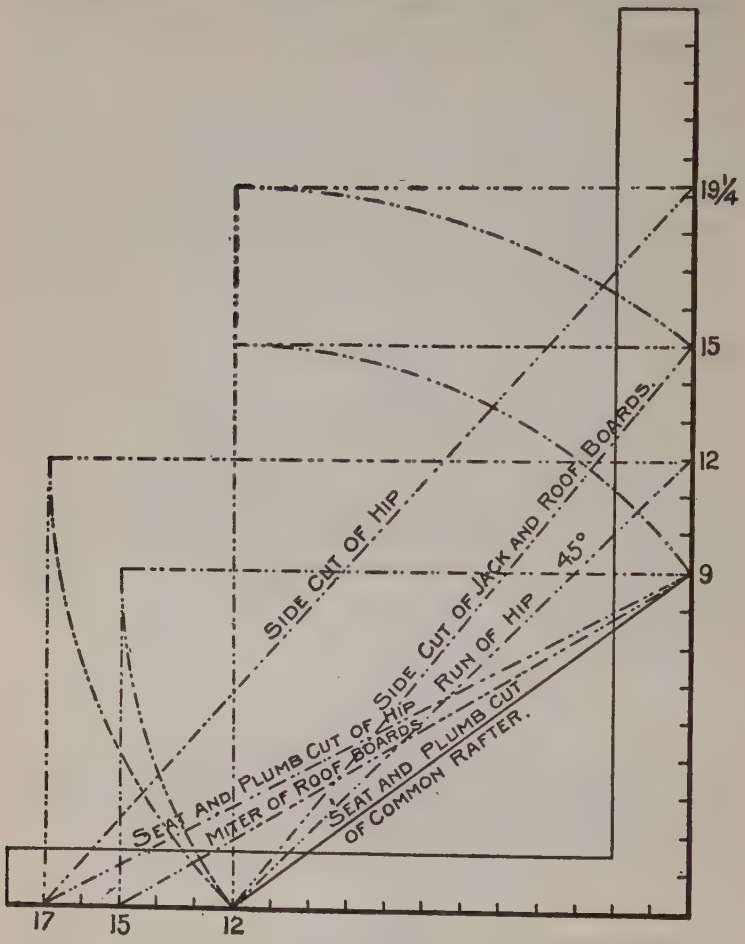

FIG. 217

In the foregoing, we have tried to lead up more to the cause and effect and have in a general way

touched on the different cuts about the roof, showing at the same time why they give correct results.

We will now take up the subject showing the various cuts in one diagram as shown in Fig. 217. Here are shown the measurements on the steel square.

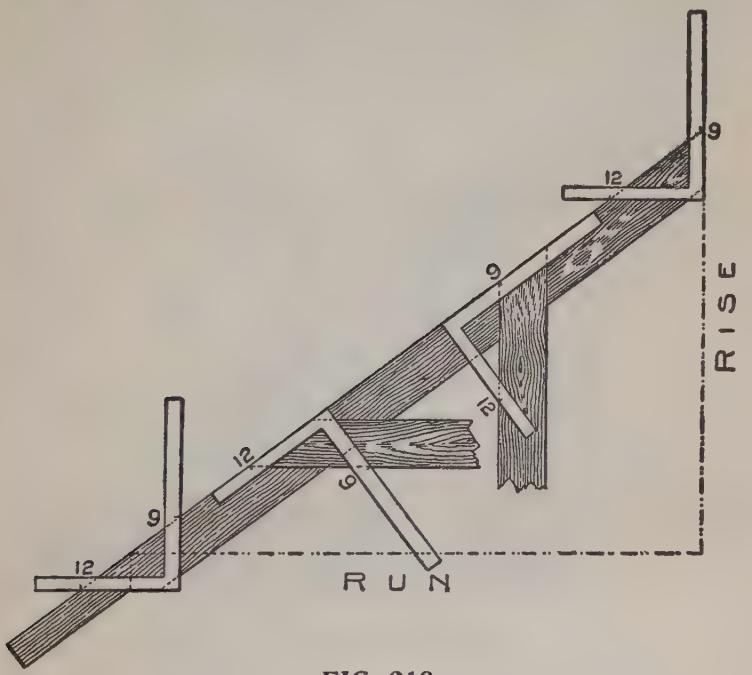

FIG. 218

For example we will take the $\frac{3}{8}$ pitch. Take 9 on the blade. Why? Because, the run being 12 inches, the span must be two times 12, which equals 24, and since the pitch is reckoned by the span, we find that $\frac{3}{8}$ of 24 is 9, and therefore rep-

resents the rise to the foot run. Then 12 and 9 gives the seat and plumb cut of the common rafter. They also give the cuts for the gable boards resting either horizontally or perpendicularly as shown in Fig. 218.

The Cuts, Lengths and Bevels of Rafters are all contained in the cube as shown in Fig. 219. The base of the cube being twelve inches square, while

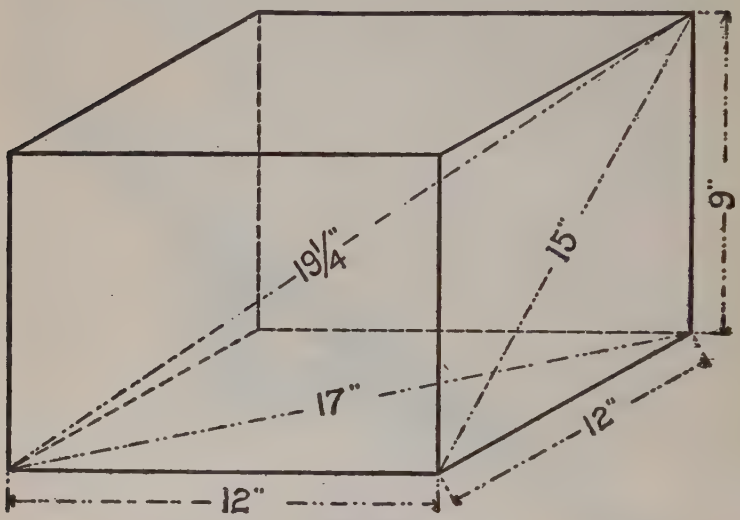

FIG. 219

the altitude is regulated by the rise given the common rafter to a one-foot run, which in this case is 9 inches or ⅜ pitch. This is one of the best methods of fixing on the mind the true position of the different rafters and why certain figures are used on the square to obtain the cuts. We will carry this thought a little further and show the corner of a hip roof in an imaginary cube with dimensions

equal the run and rise given the common rafter, as shown in Fig. 220. Here the common rafter, the jacks and the hip are shown in position with their relative runs, rises, lengths, cuts and bevels all shown in this illustration. If the corners of the building are other than at right angles, then

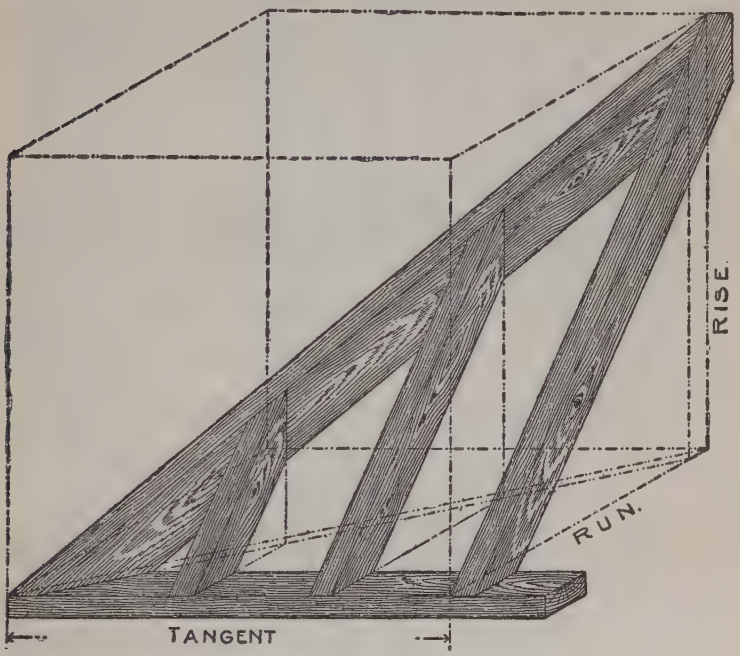

FIG. 220

the base of the cube would be to the same shape as that of the corner of the building.

Plan of Roof.—In Fig. 221 is shown a roof plan with right-angled corners and containing an octagon bay. This answers for any pitch given the roof, as there is nothing in it to distinguish the pitch.

In fact it would show just the same if there was no pitch given at all, consequently all of the angles for the side cuts are at an angle of 45 degrees. If there was no pitch, it would simply be the common miter of 12 and 12 on the steel square, 12 being used

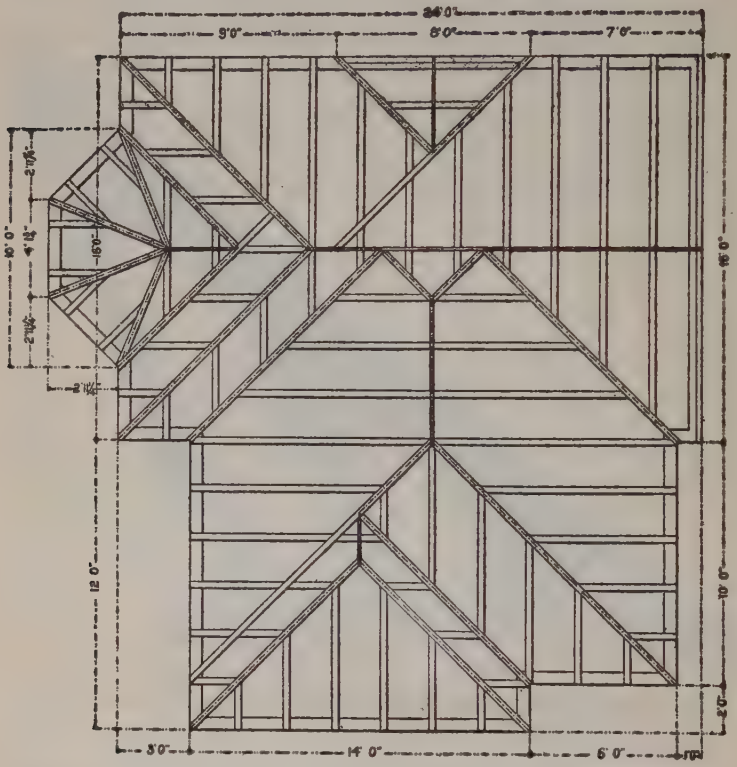

FIG. 221

on one arm of the square because it represents the length of the tangent when the run is one foot and remains so regardless of the pitch given the roof. 12 is used on the other arm of the square because

it represents the length of the rafter for one-foot run when there is no pitch given. Therefore, we let 12 on the tongue represent the tangent because it is a fixed number and answers for any pitch. When there is a pitch given the rafter, its length is increased. Thus, in the $\frac{3}{8}$ pitch, the length is 15 inches. Therefore, 12 on the tongue and 15 on the blade gives the side cut of the jack as before illustrated. If we were to cut off the peak end of the jack rafter on a parallel line with the seat cut after the side cut has been made, the angle would show just what we started from—the 45-degree angle. For the side cut of the hip, it would be 12 and 6 6-17, but in order to avoid the fractions it is better to use 17 on the tongue, as described in connection with the above figure.

The run and tangent in the case of the square cornered building being equal is very misleading. 12 taken on one arm of the square is generally ascribed to the run, when, as a matter of fact, it has nothing to do with it. The run of the rafter and its length (which gives the same result as 12 on the tongue and the length of the rafter for a one-foot run taken on the blade) gives the side cut of the jack rafter for the square-cornered building and no other. Not because 12 stands for one-foot run of the common rafter, as is generally supposed, but because the tangent equals the run, and is therefore not a general rule, but one of the things that centralizes at 45 degrees.

Now let us apply our unity rule, which, as will be seen, applies to any kind of a corner, whether

square or any other shape. The rule applies to all alike. It is the tangent or the figures on the blade that give the miter when 12 is used on the tongue. These figures transferred to the tongue, and the length of the common rafter for a one-foot run of the given pitch taken on the blade will give the cut. The blade giving the cut. Now, for an octagon roof. The tangent for the octagon is 4 23-24 or practically 5 inches. This taken on the

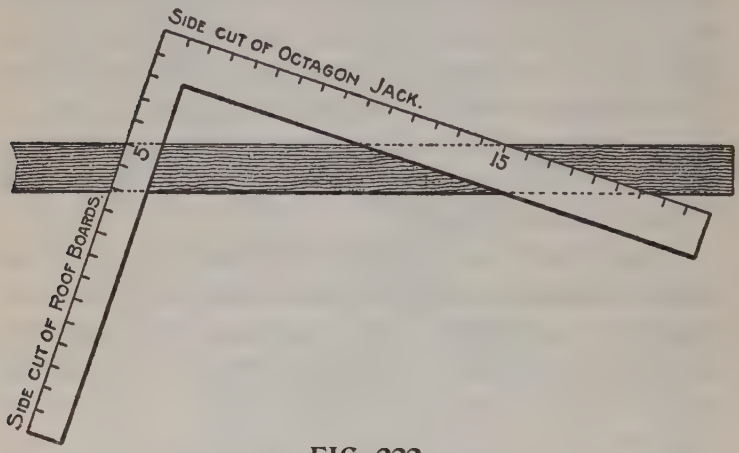

FIG. 222

tongue and 15 (the length of the rafter for the $\frac{3}{8}$ pitch) on the blade gives the side cut of the jack, and the corresponding cut across the face of the roof board to fit over the hip. The blade giving the cut in the former and the tongue in the latter, as shown in Fig. 222.

What is true of this, is true of any other polygonal roof. In Fig. 223 we show the tangents on the blade for the polygons from 4 to 10 and rep-

resent the figures to use on the tongue of the steel square instead of 12, as in the square-cornered building. In connection with this illustration are

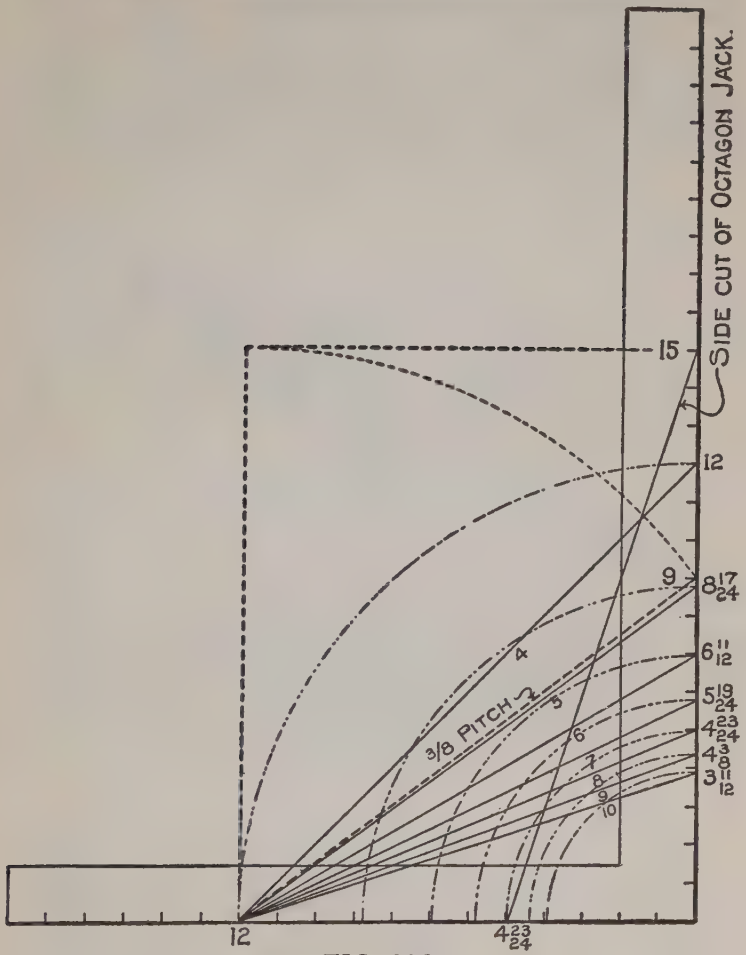

FIG. 223

shown the figures to use for the octagon as applied in Fig. 222.

Measurement Line of All Jacks, Hips and Valleys.—The true measurement line of all jacks, hips and valleys is at a line along the center of the back, and just where to place the square on the side of the rafter so as to make the cuts and length come right at that point is a question that taxes the skill of most carpenters, especially so in the

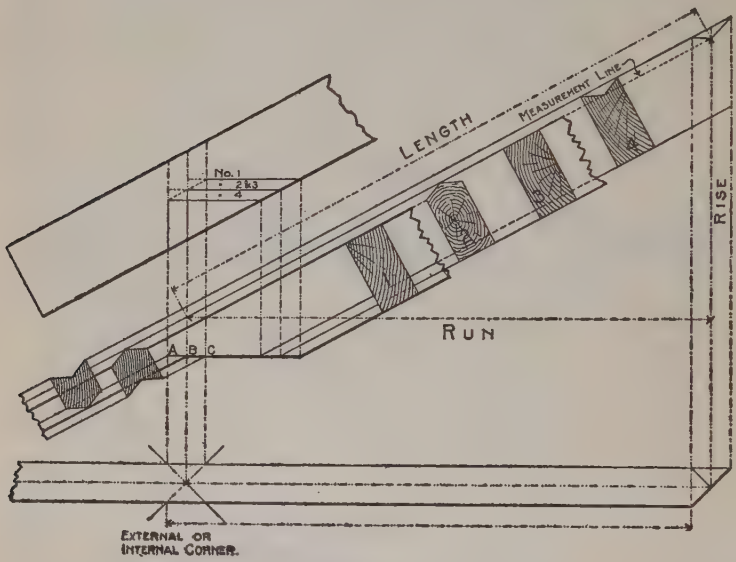

FIG. 224

case of the latter, where the same are to be backed.

In Fig. 224 we show the hip and valley under different conditions for a square-cornered building. Beginning at the bottom is shown the plan of the rafter. The cross lines on same represent the angle of the plates for either hip or valley. Above the plan is shown the elevation. The sections 1-2-3-4

represent the position of the rafters under the following conditions:

No. 1, hip when not backed; No. 2, hip when backed; No. 3, valley when not backed; No. 4, valley when backed. No. 1 is outlined by heavy lines and apparently sets lower than the others. By tracing the bottom line of the sections down to the seat of No. 1, thence up to the second elevation, will show just how far in the seat cut should be for each rafter. No. 1 cuts into the right-hand vertical line above the plan, as at C, which would make it stand at the right height above the plate, at the outer edge of the rafter, but in order to make the seat cut clear the corner of plate, it is necessary to cut into the center line B. No. 2 cuts into the same point as No. 1 ,but owing to its being backed, the seat cut drops accordingly. No. 3, which is for the unbacked valley, also cuts into the center vertical line, and in order to clear the edges of the plate, must cut out at the sides to the left vertical line. No. 4 cuts in the same depth as the latter, but as much lower than Nos. 2 and 3 as they are below No. 1. The vertical lines "A" and "C" from the plan represent the width of the rafter. Therefore, if the rafter be two inches thick, the lines A-B-C would be one inch apart, and this amount set off along the seat cut, or a line parallel with it, will give the gauge point on the side of the rafter. To make this clearer, we refer to Fig.225. 17 and 9 give the seat cut. Now leaving the square rest as it is, measure back from 17 one-half the thickness of the rafter, which would locate the

gauge point at 16, and this will be the point for the line from which to remove the wood back to the center line of the hip. The measurement from the

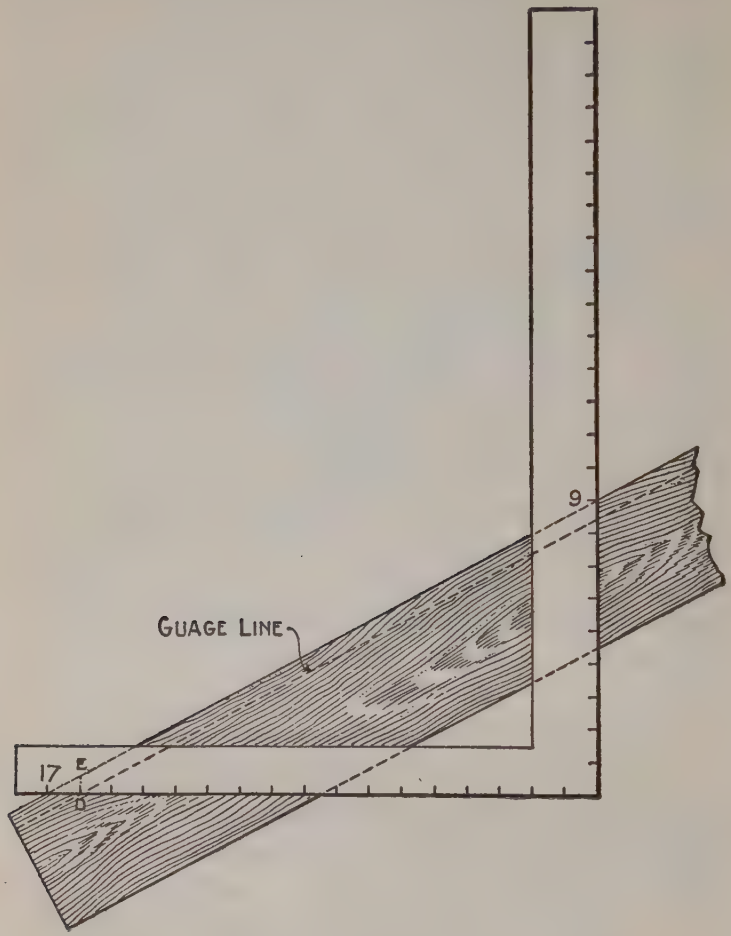

FIG. 225

gauge point taken square out from the seat cut to the edge of the rafter as shown at D-E, shows how

far apart the parallel lines of the seat cut will be under the above conditions. This rule applies to any pitch given the roof so long as the pitches are regular.

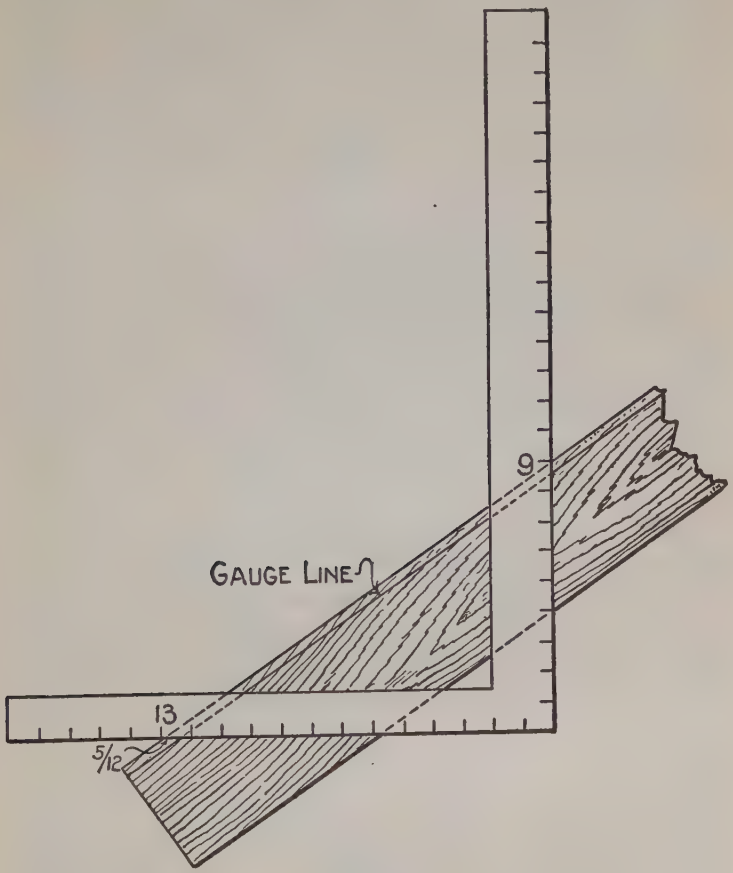

FIG. 226

Backing Line for Octagon Hip.—We show in Fig. 226 the backing line for the octagon hip. From this, it will be seen, that the method is the

same as that for the hip resting on a square corner, which is shown in Fig. 225. In this 17 and 9 give the seat and plumb cuts for the $\frac{3}{8}$ pitch while 13 and 9 give the corresponding cuts for the octagon hip. In the former a point 12 twelfths or one inch, is taken back from the edge of the rafter along the seat cut for the gauge line, while in the latter, the point is taken 5 twelfths back. The backing for any other polygonal hip may be readily found in the same way by setting off the tangent for one-half the thickness of the hip. Thus for the hip resting on a square corner, the tangent is equal to one-half of the thickness. In other words, the amounts to set off are the same figures as those used to obtain the side cut for the corresponding jack (see the figures opposite the blade in Fig. 223), but consider them as so many twelfths of an inch. Thus it is 12 twelfths, or one inch, for the square-cornered building, $8\frac{3}{4}$ twelfths for the pentagon, 7 twelfths for the hexagon, 5 twelfths for the octagon. The figures to use for other polygonal roofs are shown in Fig. 223, but the reader must bear in mind that the fractional part of the number becomes only that part of a twelfth on an inch. Thus, for the octagon the number is 4 23-24, which is lacking only 1-24 of a twelfth of an inch of being 5 inches. This is so near being 5 that we call it 5 twelfths of an inch for the amount to set off on the seat cut line as before described and shown in Fig. 226.

For a Triangular Building.—The backing line for a hip for a triangular building would be 21

twelfths or $1\frac{3}{4}$ inches to set off on the seat cut line, the latter being obtained by using 21 and 9 as compared with Figs. 225 and 226.

The backing of the hip is too often neglected. In fact, in most cases is not done at all, or if it is done, it is in a haphazard sort of a way. We have seen laborers (we will not say carpenters) take a hand-ax and hew off the corners of the hip, after it was set in place, at the time of putting on the sheathing boards. The valleys too should be backed and in most cases should be doubled on account of the downward thrust of the roof causing etxra weight on the valleys. However, it is not our intention to discuss construction in this work, but where the valleys are so doubled they should be backed one way only and that before spiking together. This makes a substantial valley and solid bearing for roof boards.

Tail End Cut of Hip or Valley.—This, too, is one of the neglected cuts, and carpenters generally pay no attention to it further than to leave the tail end long enough to catch the facia and then scribe the end cut to correspond with that of the common rafter.

In Fig. 227 we show this cut as at "A" and how it may be obtained with the steel square. From this, it will be seen that it is rather a difficult thing to get at, since the measurements are, so to speak, in another latitude. In all roofs there is an unseen, or co-pitch, and the end cut of the common rafter represents that pitch, and which, if cut square, will rest at 90 degrees from

the given pitch of the common rafter, and the cut in question must necessarily coincide with the unseen or co-pitch.

In Fig. 228 is shown the application of the

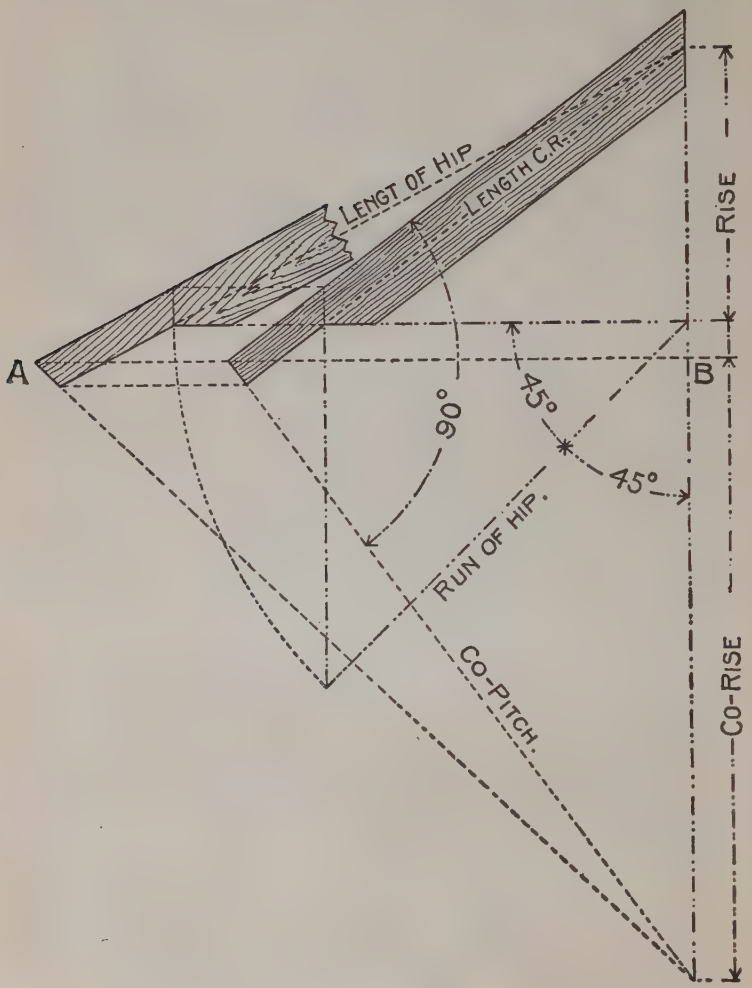

FIG. 227

steel square for the seat and plumb cuts for the $\frac{3}{8}$ pitch for the common rafter and the corresponding hip for the octagon and square cornered

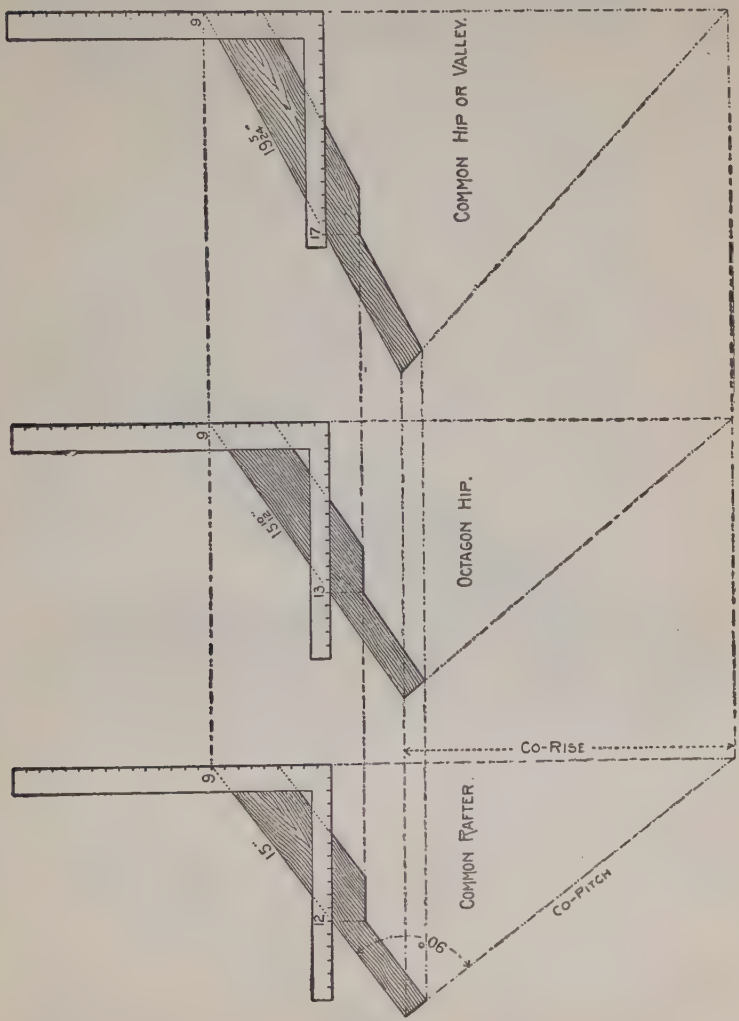

FIG. 228

building. The dotted lines clearly show the angle that the tail end cut must bear to that of the common rafter.

There is no general rule, so far as we have been able to find, whereby this cut can be had

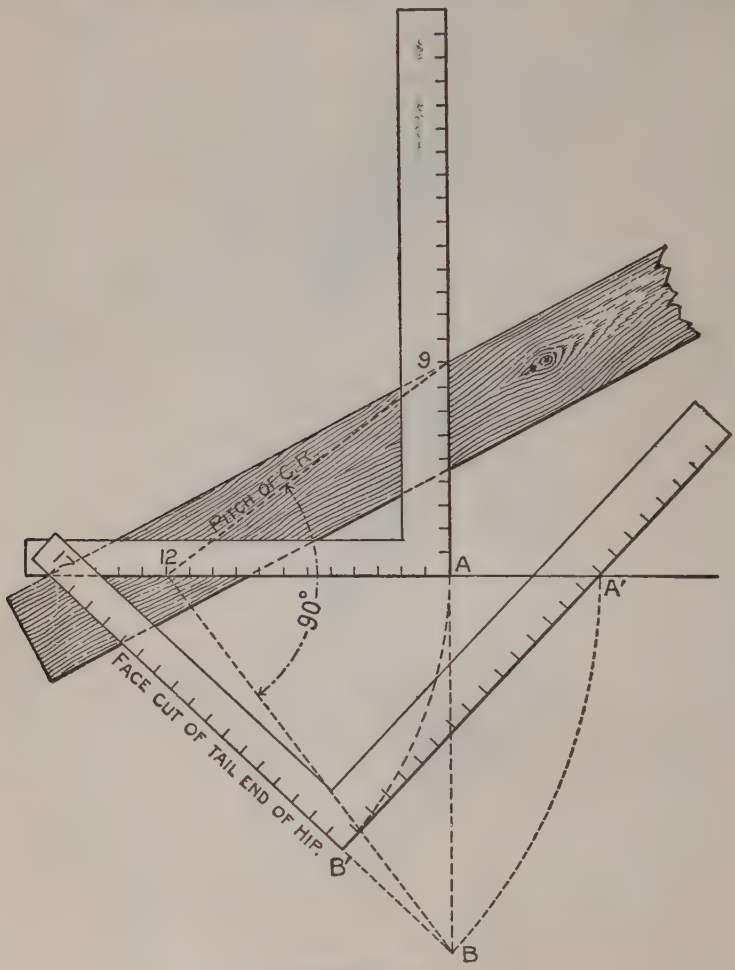

FIG. 229

direct from the edge of the rafter, as in other cuts, but it may be had by taking the run (17) on the tongue and the co-rise on the blade and applying this to a line parallel with the seat cut and the tongue will give the desired cut as shown in Fig. 229.

However, this is only the angle or where the cut would be at the center of rafter. To get the proper angle on the side of the rafter, the cut would pass through the point on the seat cut as before described for the backing lines.

The foregoing practically covers all of the cuts and bevels about the even pitch roof that may be readily obtained with the aid of the steel square. There are, of course, other ways of arriving at the same result by geometrical diagrams, etc., but there can be nothing better than a thorough knowledge of the tangents of the steel square and the relation that they bear to one another.

Side Cut of Jacks.—In Fig. 230 we show the side cut of the jacks from a 4 to 24-inch rise to the foot run and for polygonal corners from 4 to 12. In this illustration we show the figures to use on the steel square for twenty of the pitch lines and for the square corner and eight of the polygonal jacks, also for the level miter making in all 220 side cuts, or miters, that can be had from this illustration alone. Since the tangents of the polygons govern the figures to use on the tongue, they are as shown in connection with this illustration. Thus, to obtain the side cut of

the pentagon jack for the $\frac{3}{8}$-inch pitch, we use $8\frac{3}{4}$ on the tongue and 15 on the blade. The blade giving the cut.

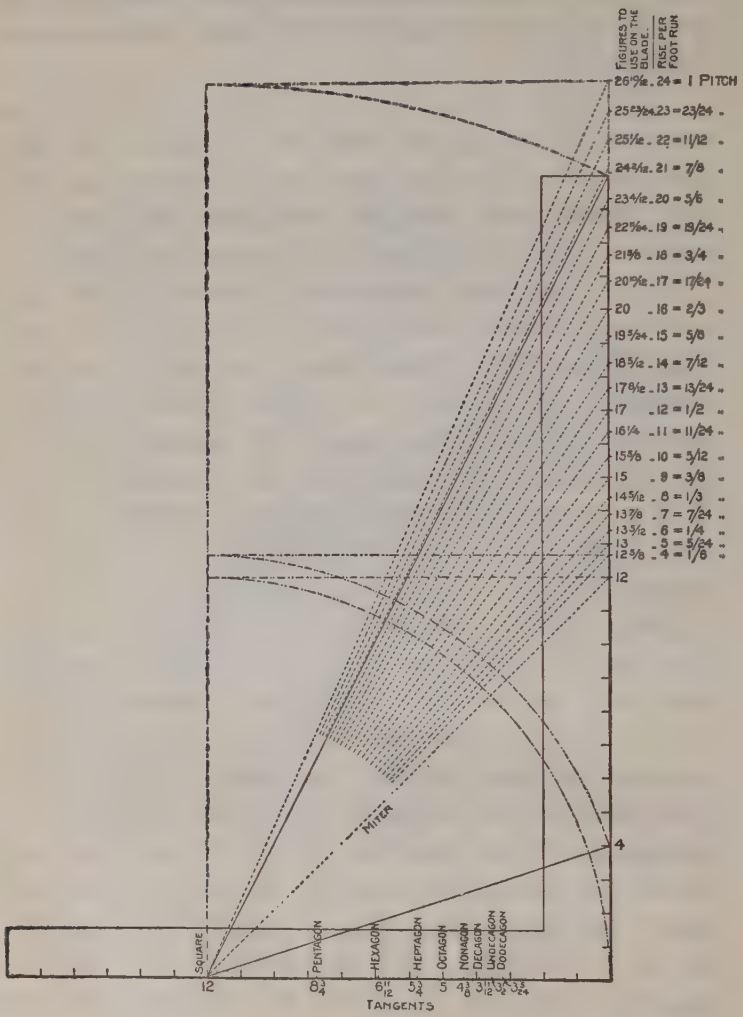

FIG. 230

Hexagon Jack.—Proceed in like manner for the hexagon jack, using 6 11-12 on the tongue, and so on to the end. The reader will notice that several of the pitch lines are beyond the length of the blade and in that case it is necessary to reduce the scale, which may be done by taking one-half of the lengths here given on the blade and tongue. The tangent for the triangle is practically 20¾ inches, which is beyond the length of the tongue, so that it is necessary to make a reduction in the scale, so as to bring it in on the tongue. Then if we take one-half of 20¾, which would be 10⅜, on the tongue, and one-half of the length of the pitch lines as given, will give the desired cut. Thus for the ⅜ pitch it would be 10⅜ on the tongue and 7½ on the blade. The blade giving the cut.

We fancy we hear the critics say, "Why go into all these side cuts of jacks for roofs that are not in style and never will be?" To such our answer is: If you understand the principle of the side cut of the jack for a common square-cornered building, you will understand for the polygonal jacks whether you are ever called upon to frame them or not.

As we write these lines we are reminded of a contractor who had a hexagonal roof to frame. He had a good working force on the job and the time that was lost in help and waste of material would have made a nice profit. Another time a lot of masons were laid off one-half day to give the "Boss Carpenter" time to go to a neighbor-

ing barn where he could have a level floor to lay off a diagram for a full size octagon template for the masons to work by, and yet these men thought they understood the square. They could frame the common hip and valley roof, but when they came to something a little out of the ordinary they did not understand the true principles involved. If these men had possessed a knowledge of the tangents and how to apply them on the steel square, they would have known in a minute's time what figures to use for all of the cuts, lengths and bevels required in the work.

We have seen the carpenter, after cutting and setting the common rafters, climb up the gable and scribe the sheathing boards to the pitch of the rafter instead of using the same figures on the square that he used for the seat and plumb cuts of the common rafter, and yet, he too in his mind knew all about the square and how to frame a roof.

If the first man had possessed a knowledge of the tangents, he would have multiplied the inscribed diameter of the hexagon by 6.93 (6 11-12) and reduced to feet and inches, would have given the length of the sides and all of the cuts and bevels for the roof. The second man should have multiplied his diameter by 4.97 and reduced to feet and inches, would have given the length of the sides of his template. It is the knowledge of such things as these that counts in the race for success, and the day is fast approaching when he

who would be successful in his trade must know the shortest and best methods.

Plumb Cut of Rafter.—In our rounds among the builders, we find that nine times out of ten the boss framer, after laying off the plumb cut

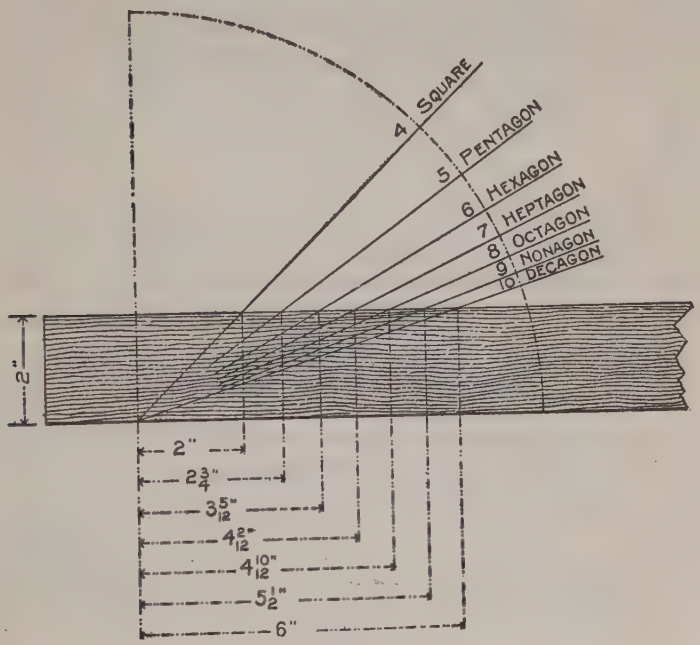

FIG. 231

on the rafter, would take a block cut from the rafter and place it edgewise along with the plumb cut and mark on the opposite side and then diagonally across the top of the rafter to the plumb line on the opposite side and then cut to these lines, which, of course, give correct results for either side cut of jack or hip for the square-

cornered building, but when asked to frame any other than for the square corner, more than likely could not explain and was, so to speak, up against it, because he did not understand the true principle. Yet what is true of the square corner is true of all other angles, which we think will be made clear by referring to Fig. 231. In this we show the angles for the polygons from 4 to 10 and are the same as those shown in Fig. 230, but the cuts are arrived at in a different way.

From this, it will be seen that it is the amount of the base of a triangle whose altitude is equal the thickness of the rafter, that is set off from the plumb cut. In the case of the square building, the base and altitude being equal is the reason that the thickness of the rafter set back from the plumb cut gives the proper angle across the top for the cut. In the illustration we show the amount to set off for the different polygonal jacks.

Octagon Jacks.—In Fig. 232 is shown the application for the octagon jack. The plumb lines A and B remain 4 10-12 inches apart, regardless of the pitch given the common rafter, as will be seen by referring to the elevation in connection with this figure. Here we have the $\frac{1}{2}$, $\frac{1}{4}$ and the level or no pitch. These lines represent the plumb cut on either side of the rafter and by cutting diagonally from one to the other across the back will fit to the side of the hip. It must be remembered that the thickness of the

jack governs the width the lines will be apart. In Fig. 231 the jack is given as being full two inches thick. Hence, for the octagon they are

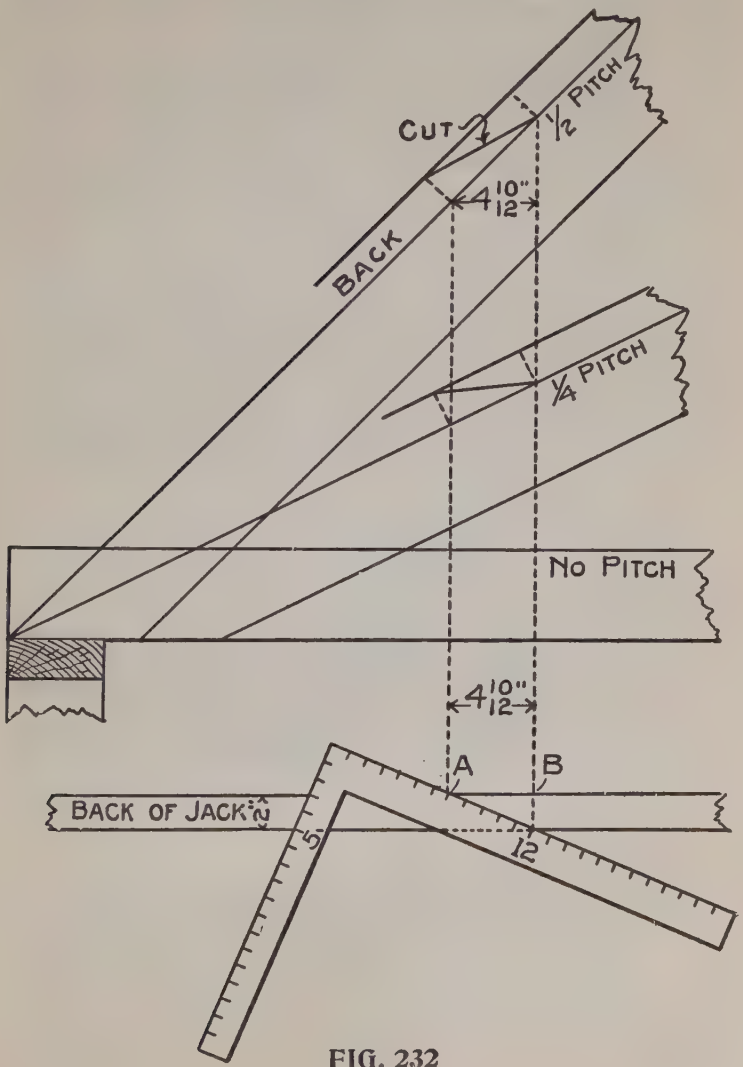

FIG. 232

4 10-12 inches apart. But, after all, we do not get away from the use of the square, as will be seen by referring to the plan in Fig. 232. Here the square is shown applied to the back of the jack with the figures that give the octagon miter and the distance apart of the lines A and B is determined at the point where the blade intersects edges of the rafter, and lines drawn at right angles from these points from the rafter govern the distance apart the plumb lines will be. For any other polygonal jack, proceed in like manner, using the figures on the square that give their miter. The result, however, will be the same as given in Fig. 230, which is much the better system, because it gives the cut direct from the square. However, the formula given in Fig. 231 is worth knowing.

Side Cut of Hip.—In Fig. 233 is shown the companion piece to Fig. 230, and represents the side cut of the hip. A line from 12 to 12 on the blade and tongue represents the run of the hip and its length taken on the tongue and the length of the hip (from 17 to the desired rise on the blade) taken on the blade, will give the correct angle across the top of the unbacked hip. The blade giving the cut.

The first column of figures to the right of the blade represents the length of the hips from a 4 to a 24-inch rise in comparison with the common rafter and are the figures to use on the blade to obtain the side cut. The second column represents the rise in inches to the foot run of

the common rafter, and the third designates the pitch. Inasmuch as the lengths of the hip above the 16-inch rise exceed the length of the blade, it is necessary to reduce the scale. Therefore, the

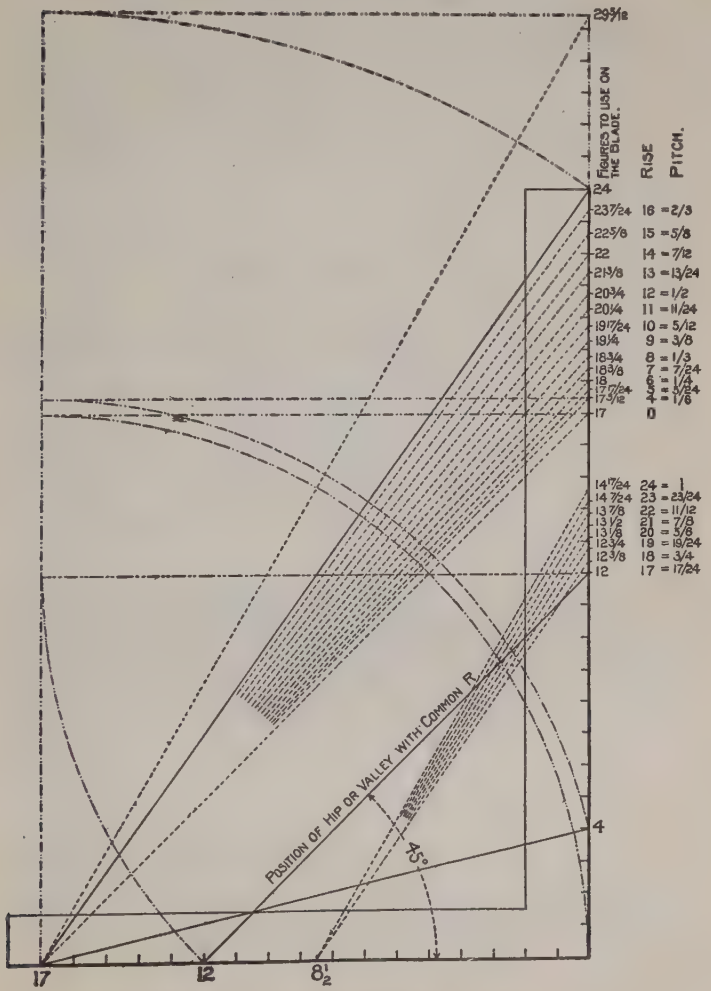

FIG. 233

lines centering at $8\frac{1}{2}$ on the tongue are for the one-half scale. The figures to use on the blade are, therefore, reduced in like proportion to what they would have been in the full scale. However, it must be understood that any figures on the blade and tongue may be used that are in proportion to those used in the full scale. Every fractional mark on the blade represents a scale. Therefore, taking the side of the square that is divided in twelfths there would be $24 \times 12 = 288$ different scales and all giving the same result, but the intersections on the tongue would be in complicated fractions.

Lengths, Cuts and Bevels of Common Rafters.—In Fig. 234 is shown a part of a very convenient table for the length, cuts and bevels for the common rafter up to an 18-foot run and with a rise from 1 to 24 inches to the foot. We have only given the figures for two of the pitches (1-3 and 3-8).

The figures on the blade represent the rise to the foot run. The fractional figures to the left of the blade represent the pitch of the common rafter. The figures on the tongue represent the run in either feet or inches. Therefore, if we wish the length of the common rafter, for a 16-foot span for the $\frac{3}{8}$ pitch, we take one-half of the 16 for the run on the tongue (8) and look in the square opposite $\frac{3}{8}$ and we find 6 feet which represents the rise and 10 feet represents the length of the rafter. If it be an 8-inch run, then the figures found there would represent as many inches.

This table is very convenient in finding the common difference in the length of jacks; as they are but a part of the common rafter, their lengths may be readily found as follows:

If they are spaced one foot from centers, then the length of the first square will be the common

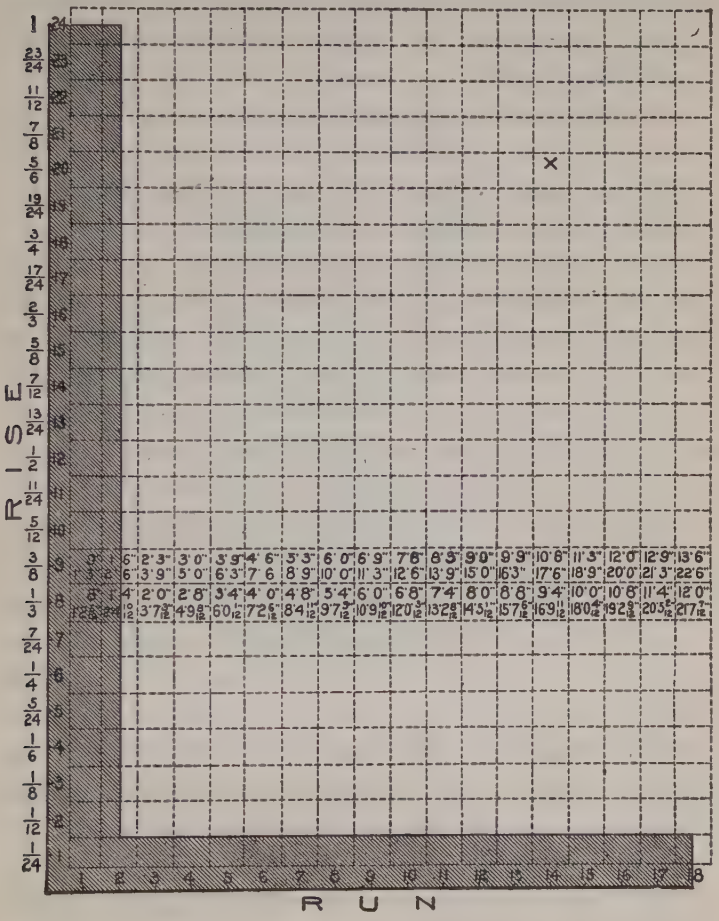

FIG. 234

difference. The length of the second jack will be that found in the second square, and that for the third will be found in the third square, etc. If the jacks are spaced on 24-inch centers then find the lengths in every other square. If they be placed on 16-inch centers, look under the 16th run and consider the length found there as inches. If they be placed on 18-inch centers, look under the 18th run, etc.

There are twelve scales in this table. Each figure in the run representing a scale and all giving the same cuts. Thus, the seat and plumb cuts for the common rafter are as follows:

Take the number of any run on the tongue and its rise found in the square above and opposite the desired pitch, on the blade will give the seat and plumb cuts. Take the number of any run on the tongue and the corresponding length of the rafter on the blade will give the side cut of the jack and also the face cut across the roof boards to fit in the valley or over the hip. The blade giving the cut on the former and the tongue in the latter.

Take the length of the rafter for any run on the blade and its rise on the tongue and the latter will give the miter cut across the edge of the roof boards, which is the same as the miter for the square hopper. The figures for the full scale are found in the twelfth run for the above cuts as before illustrated.

To Find the Side Cuts for the Polygonal Jacks.—Take the tangent on the tongue (see Fig. 230)

and the length of the common rafter found in the twelfth run on the blade and the latter will give the cut.

Lineal Board Measure.—This table also contains a complete lineal board measure for any width of board up to 18 inches, as follows:

Let the figures on the tongue represent the width of the board and those on the blade the length. The top figures in the intersecting squares opposite these numbers will be the contents of the board in feet and inches, as follows:

A board 6 inches wide and 9 feet long contains 4 feet 6 inches. A board 17 inches wide and 9 feet long contains 12 feet 9 inches. A board 15 inches wide and 8 feet long contains 10 feet, etc. A board 14 inches wide and 20 feet long, the answer would be found in the intersecting square opposite the starting points, as at X. Thus it will be seen that a completed table of this kind would come very handy as a ready reckoner. The reader will notice in the $\frac{3}{8}$ pitch that the lengths are without fractions. This occurs at three places on the blade—5, 9 and 16, respectively. Thus in the 1-3 pitch, the lengths end in fractions and are expressed in twelfths. For an 8-foot run the length would be 8 feet 7 5-12 inches. For an 8-inch run the 5-12 may be discarded as it represents less than half of a twelfth of an inch. The answer would then be 9 7-12 inches.

Length of Rafters for Odd Runs.—We wish to call special attention to the table at Fig. 234, in

the convenience of same for finding the lengths of rafters for odd runs, such as feet, inches and fractions of an inch in the run, as the figures stand for either feet, inches or fractions of an inch. The fractions being expressed in the same denominations (twelfths), permits of a sliding scale, as follows: for an example, suppose the run is six feet and one-half inches with a one-third pitch. In the intersecting square opposite the rise and run, we find seven feet two and six twelfths which answers for the six feet. For the six inches in the run, read the above figures as so many inches and twelfths of an inch, and for the half-inch, read the above figures again as so many twelfths and fractions of a twelfth of an inch. The whole may be expressed thus:

For the six feet . . 7 feet 2 and 6-12 inches
For the six inches . . . . . 7 and 2-12 inches
For the six-twelfths . . . . . 7-12 inches

Answer . . . . . 7 feet 10 and 3-12 inches

Then 7 feet 10 3-12 inches is the correct length. The last two figures (8 and 6) are dropped because they represent too small a denomination to be retained. Remember these figures represent twelfths (not tenths) and we only carry to the next column when the sum exceeds twelve, otherwise the operation is just the same as in simple addition. If the run was, say 5 feet 7 and 9-12 of an inch, the figures would be expressed thus:

For the five feet . . . . . 6 feet and 1-12th inches
For the seven inches . . . . . 8 and 4-12 inches
For the nine-twelfths inch . . . . . 10-12 inches

Answer . . . . 6 feet 9 and 4-12th inches

Then 6 feet 9 and 4-12 inches would be the correct length for the common rafter. This may seem like getting the lengths and cuts down to a small point. So it is. To many it may seem useless. In this, we have been accused of splitting hairs, but we would rather see split hairs than see rafters wedged up with a "dutchman" and with gaping joints at the bearings, for what is the use of using good material and leaving yawning joints with the bearings oftentimes at the tip ends of the rafters where the wood is thin and this cut to pieces with nails in the vain effort to make it "good enough?" If we make poor joints why not use poor lumber? Sorry to say we are forced sometimes to use poor lumber, but there is no occasion for poor joints. Make the cuts to get the full bearings and thus save all the strength there is in the material in bracing power. This table refers only to the rise and length of the common rafter. It could be so enlarged as to include the corresponding octagon hip and common hip or valley, thus making a very handy table for ready reckoning purposes.

In Fig. 235, we show how all of the lengths, cuts and bevels may be obtained from the triangle, bounded by A-B-C, formed by the runs of the common and hip rafters and the tangent, as

shown at No. 1, as follows: From the run of the common rafter, erect the desired rise as at A-D

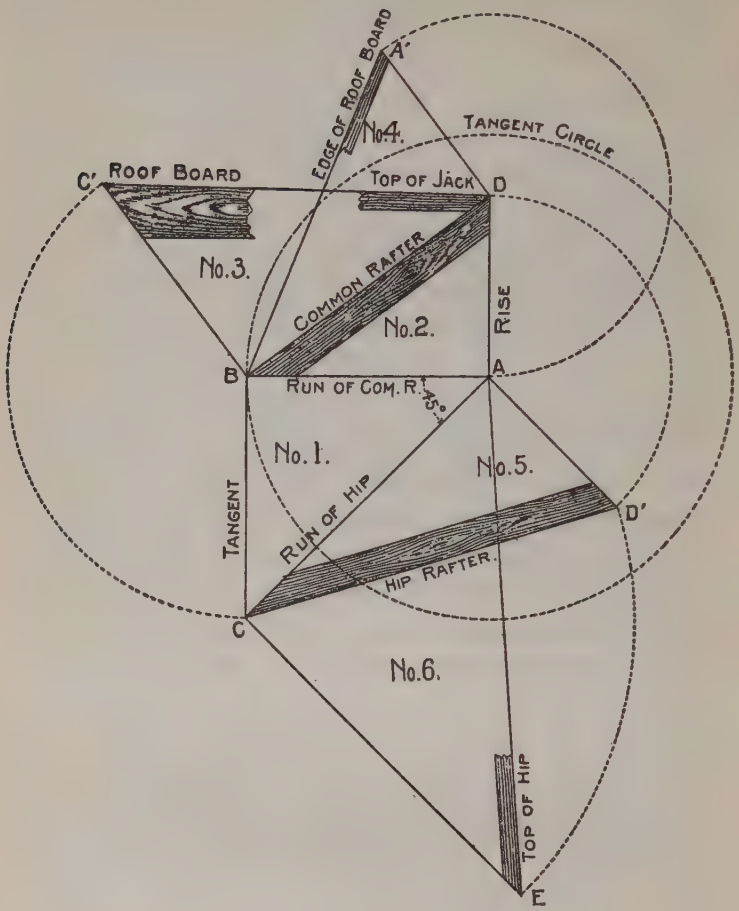

FIG. 235

and connect D-B. This forms the second triangle and contains the length, seat and plumb cuts of the common rafter, as shown in No. 2. At right

angles from the common rafter draw a line equal to the tangent as B-C[1] and connect D-C[1]. This forms the third triangle, as shown in No. 3. In this are shown the face cut of the roof boards to fit in the valley or over the hip. This angle also gives the cut across the back of the jack to fit against the hip or valley, commonly called side cut of the jack. At right angles from the common rafter draw a line equal to the rise as D-A[1] and connect B-A[1]. This forms the fourth triangle, as shown in No. 4. In this is shown the edge or miter cut of the roof boards to fit in the valley or over the hip. In other words, this is the same as the miter for a hopper. Now then, we will work from the other side of triangle No. 1. From the run of the hip draw a line at right angles from A-C equal to the rise, as at A-D[1] and connect C-D[1]. This forms triangle No. 5, and contains the length, seat and plumb cuts of the hip. From hip rafter and at right angles to A-C draw a line equal to C-D[1] as C-E and connect A-E. This forms triangle No. 6 and in it is contained the top or, commonly called, the side cut of the hip. The illustration is for the 3-8 pitch or 9 inches rise to one foot run of the common rafter. For an octagon roof the angle at No. 1 would be 22½ degrees. For a hexagon roof it would be at 30 degrees.

In Fig. 236 are shown all of the above angles formed by as many steel squares, with the corresponding numbers placed on same that help to form two of the sides of each angle, and, by refering to the preceding illustration, the reader can

readily see how the cuts are obtained on the steel square.

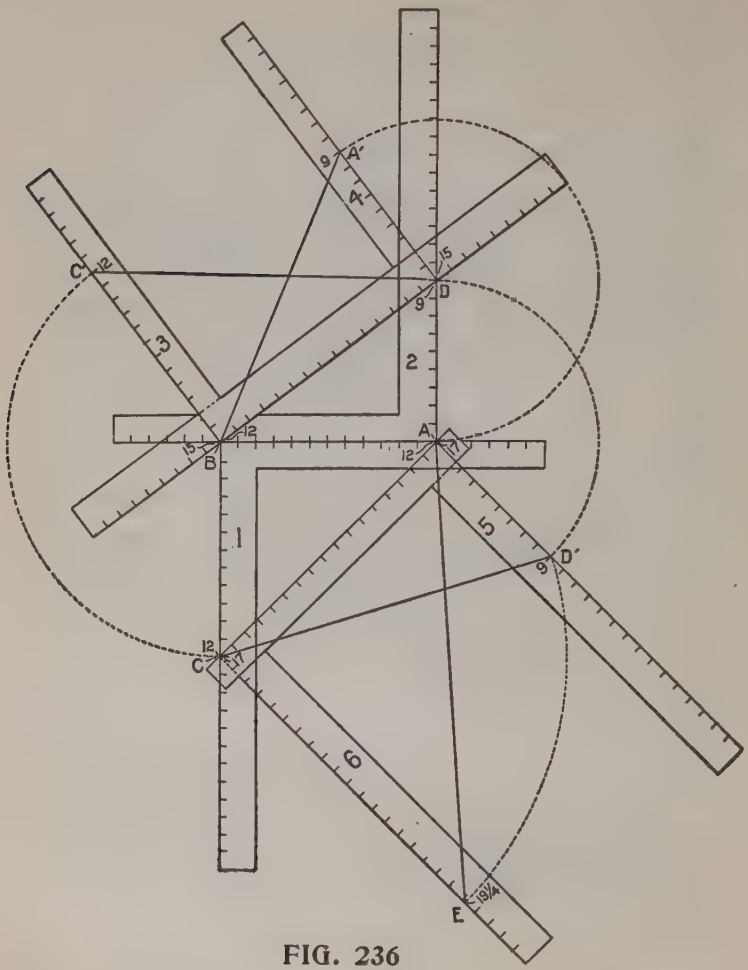

FIG. 236

Developing Cuts and Bevels.—Illustrating the cuts and bevels with the triangle is probably the most practical way of showing the various cuts

contained in and about the roof, regardless of its shape or pitch given the rafters, as by its manipulation all of the angles can be obtained. The steel square serves as the triangle, the blade and tongue forming two of the sides (run and rise)

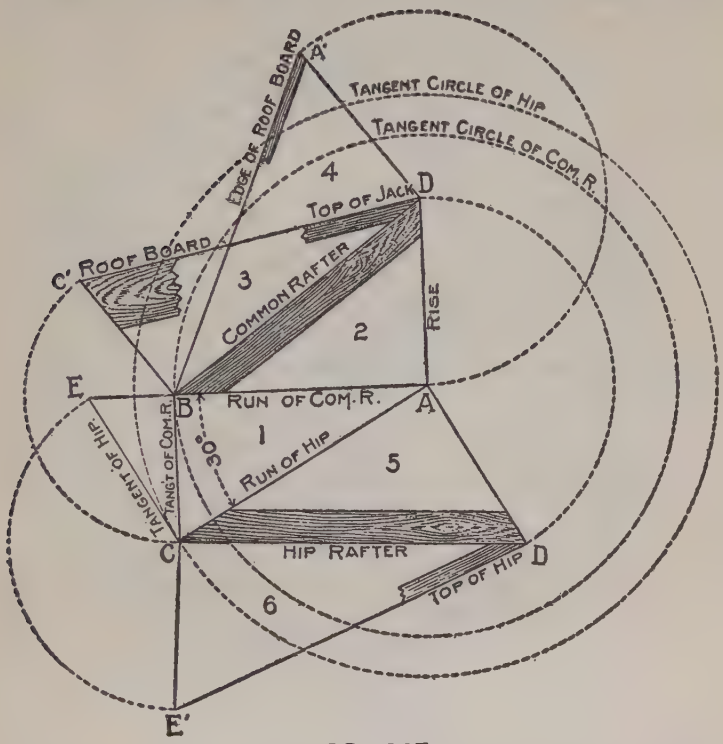

FIG. 237

and these, applied to the pitch given the rafter, form the third side, or if it be for a miter, then the angle in degrees of same from the starting point from the surface cut will give the proper angle to obtain the cut.

In Fig. 237 are shown the triangles for a hexagon (six sided) roof and by comparing with the preceding illustrations, the reader can see wherein they differ. The application is the same except in the sixth angle. Angle No. 1 represents the plan and governs the layout of the diagram. In

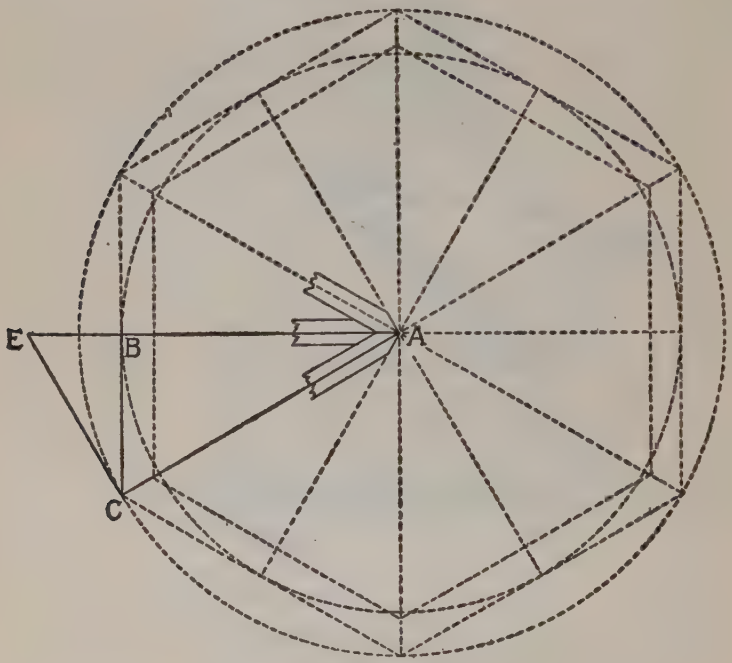

FIG. 238

this, the angle between the runs of the common rafter and the hip is at 30 degrees. Now, by referring to Fig. 238, we show the angle bounded by A-B-C as shown at No. 1 applied to the plan of the roof as follows:

A-B run of the common rafter. A-C run of

the hip. B-C tangent of the common rafter. Now by extending A-B intersecting a line at right angles from A-C as at E, then E-C will represent the length of the tangent from the hip. Note:— See the difference in length when compared with the run of the hip.

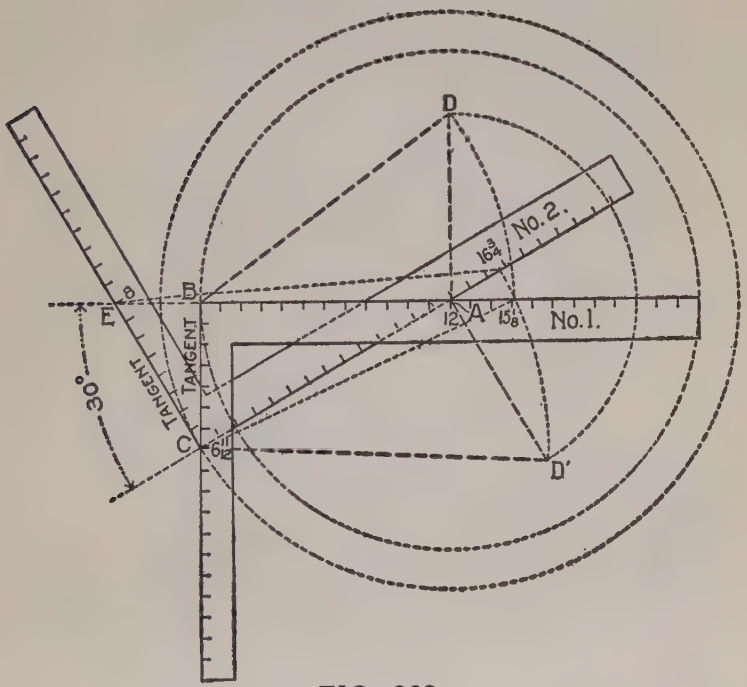

FIG. 239

In Fig. 239 is shown how these angles may be obtained with the aid of two steel squares. It may be worked to a scale of one inch to the foot, or full scale for a one-foot run of the common rafter, as shown in the illustration. The figure on the tongue that gives the hexagon miter

(6 11-12) represents the tangent for the common rafter as shown on square No. 1, and by placing square No. 2 with its heel resting at 6 11-12 and with the blade intersecting at 12 on square No. 1, then a line continued from the heel of square No. 1 and in line with the blade intersecting the tongue of square No. 2, which in this case is at 8 and represents the tangent for the hip. Now by erecting the rise from the intersection of the blades to D and D′, then B-D represents the length of the common rafter and D′-C that of the hip and these lengths, taken on the blade of the respective squares, will give the figures to use for the side cuts of the rafters. Thus—6 11-12 and 15 1-8 as shown, will give the side cut of the jack, or of the common rafter, to fit in the angle between the hips at the peak (see Fig. 238) and 8 and 16 3-4 will give the side cut of the unbacked hip to fit in the peak, or if it is first backed, then the same figures as shown on square No. 1 applied to the backing plane will give the same result. But, of course, this is not practical because the ends of the hip would run to a feather edge, as shown. A better way is to insert a hexagon block with sides equal the width of the hip, then the cut of the hip would simply be the plumb cut. This would afford a better nailing space and each hip would have a direct bearing against the one on the opposite side.

Seat and Plumb Cuts.—In Figs. 230 and 231 are illustrated the side cuts of polygonal jacks and to complete this line of work, we show in

Fig. 240 the accompanying illustration of the seat and plumb cuts for the corresponding hips and valleys. Beginning at horizontal line, which represents the run of the rafters, then 12 and 9

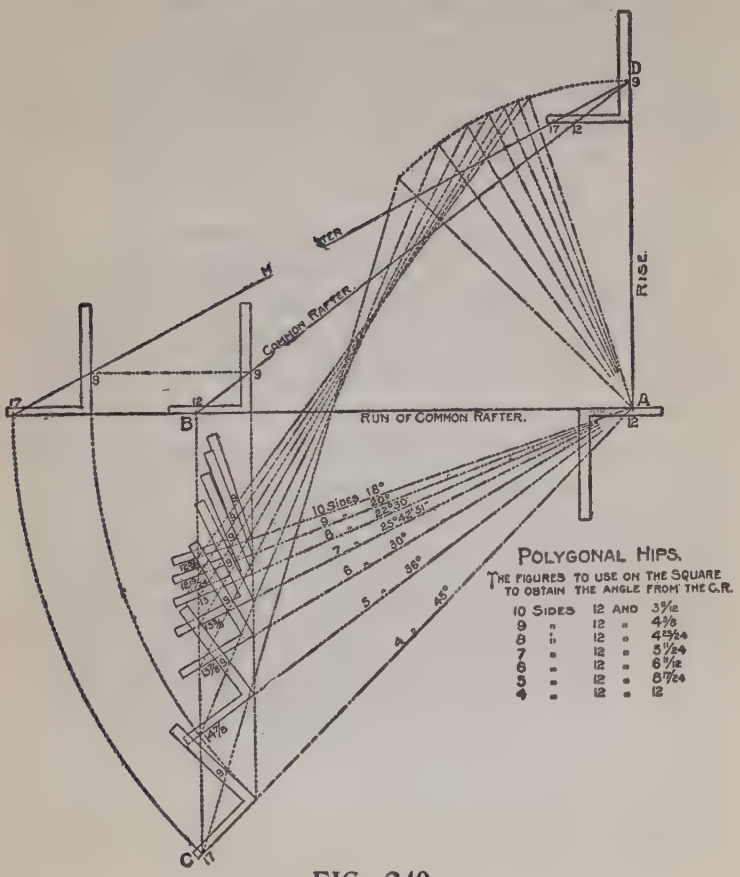

FIG. 240

on the steel square represent the cuts for the common rafter for the 3-8 pitch. The steel square just beneath the horizontal line and with the

12-inch mark on the tongue resting at the rise, locates the angle of the respective runs with that of the common rafter and the figures to use on the blade of the square are the same as those used for the polygonal miters and as shown in the table. It will be seen, the vertical line dropping from 12 on the tongue of the steel square at the seat cut of the common rafter, as at B, and where the same intersects the figures on the tongue of the squares resting just beneath on the individual runs, gives the figures to use on that member for the cuts. The rise being the same as the common rafter, we use the same figures on the blade, as will be seen by referring to the illustration. Now if the runs of the hip were pivoted at the point of the rise, as at A, and we could raise them up until they rest on the horizontal line, it would be found that the pitch lines would center at one point at the top, as at D, and they would all fall in between 12 and 17 on the tongue and center at 9 on the blade. The figures on the tongues of the squares would remain as shown for the seat cut. If there was no pitch given to these rafters, then the corresponding figures that give the polygonal miters would give the side cut of the hip, though the cuts on the square would be reversed.

Part IV

RULES AND EXAMPLES. To lay off an octagon — To lay off a hexagon — To make an ellipse — To make an oval — To bend a board for a circle — To find the number of courses of shingles for a roof — To draw a polygon in a given circle — To divide a circle into any number of equal parts — To cover a circular dome — To cover a conical roof — To kerf a board to bend to a given circle — The protractor.

Rules and Examples.

Fig. 241 shows how **to lay off an octagon on the end of a timber.** Lay the square on the line drawn from corner to corner, a distance equal to half the width of timber, square over, and you have one corner. Turn the square over and you have another, etc. The lower square at bottom illustrates the octagon miter, which is 10 and 24; cut on 10. The octagon corner is a square miter; that is, if you cut timber to lap on octagon corner they are cut on 12 and 12, or square miter.

If you wish **to miter a pentagon,** place the square on $8\frac{3}{4}$ and 12; cut on $8\frac{3}{4}$.

To Lay Off a Hexagon.—Fig. 242 illustrates a hexagon. To lay off from a square timber divide two opposite sides into four equal parts and the other two sides into two equal parts. A circle can be laid off into a hexagon the same way, as can be plainly seen in the illustration. The hexagon miter is 8 and 14, cut on 8. The corner is the same.

Fig. 243 illustrates **laying off a stair,** and needs no further explanation.

Fig. 244 is an illustration of **a good method of cutting bridging.** If the joists are 8 inches wide

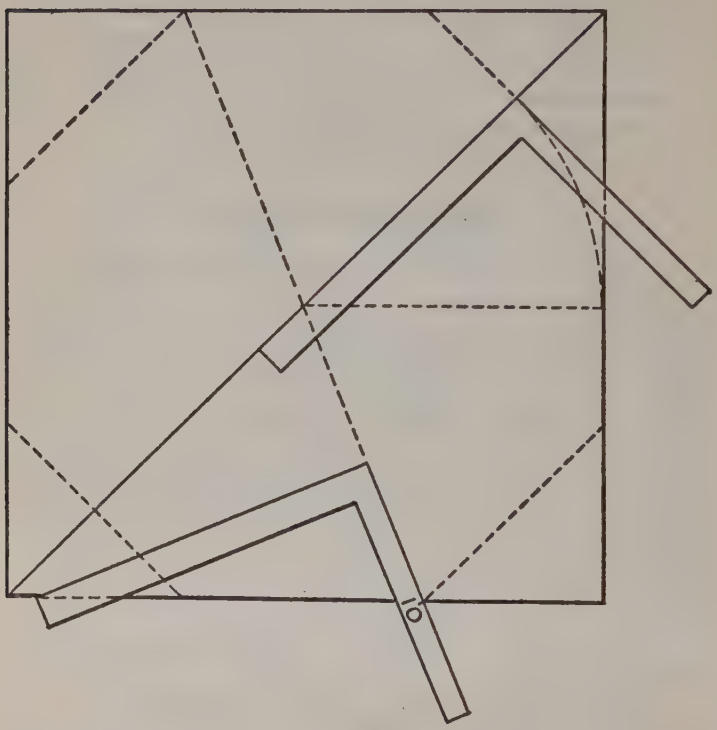

FIG. 241

and 16 inches centers, there will be 14 inches between. Place the square on 8 and 14, and cut on 8, and you have it. The only point to observe is that 8 is on the lower side of the piece of bridging while the 14 is on the upper, and not both on same side of timber, as in nearly all work.

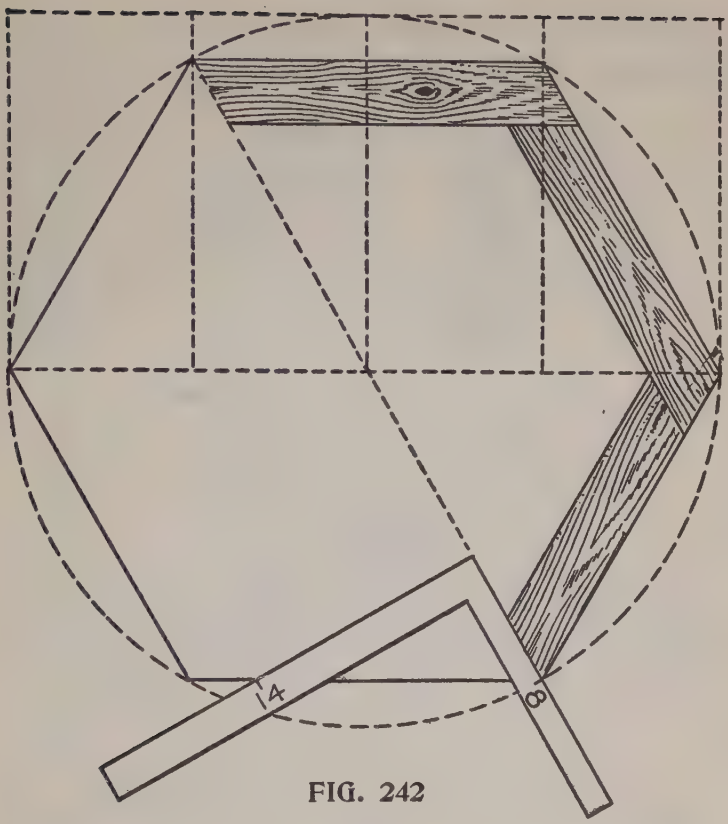

FIG. 242

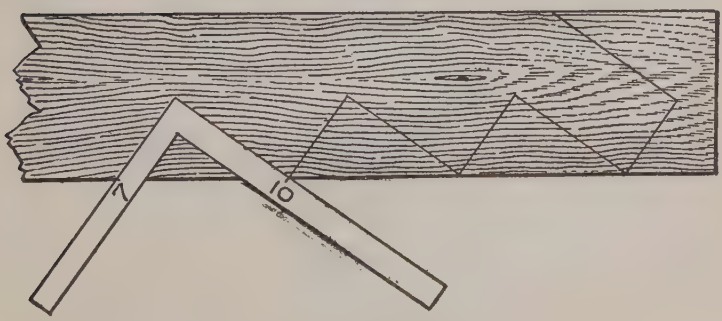

FIG. 243

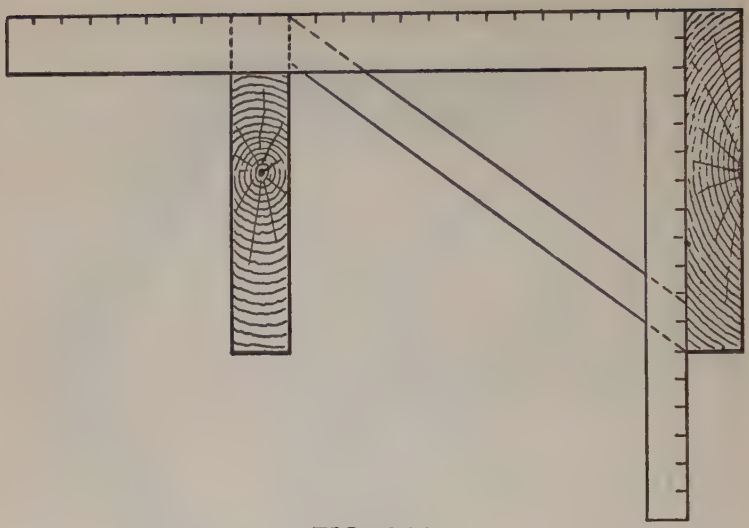

FIG. 244

To Make an Ellipse for a three-foot opening, one foot high, drive a brad in a lath one foot from end, which gives height; another 18 inches from

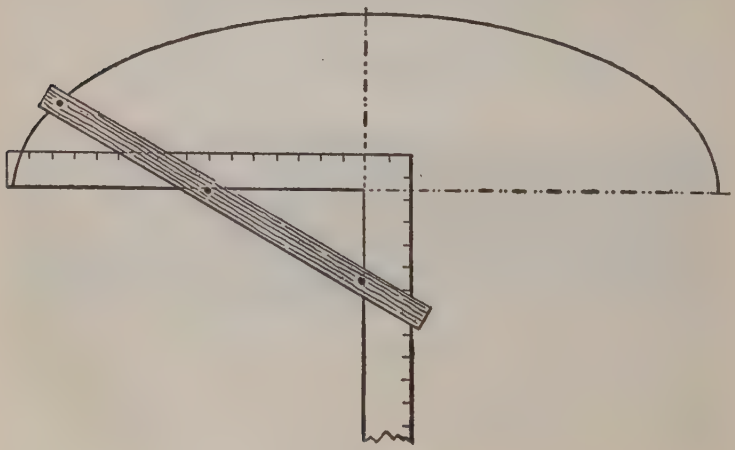

FIG. 245

end, which gives one-half width. Apply as illustrated in Fig. 245, reverse the square and it is completed.

Fig. 246. **To Make an Oval** begin same as on ellipse, swing around on the one brad, which

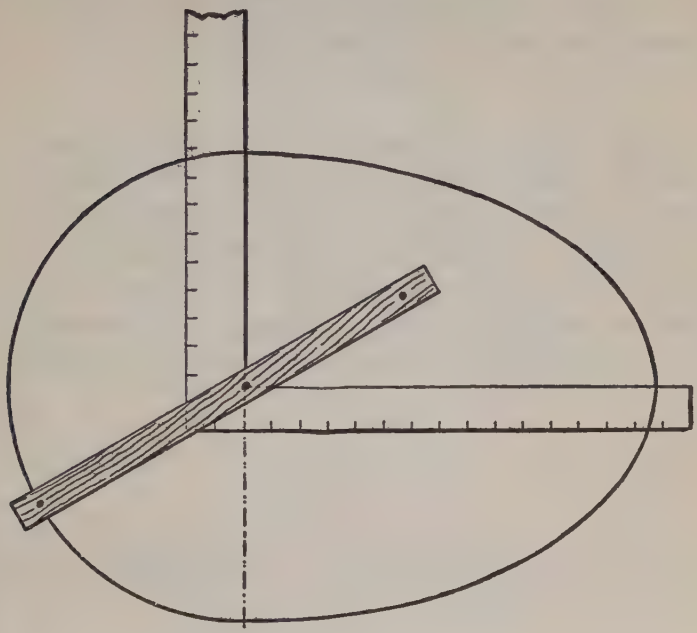

FIG. 246

will make a circle on the large end, and it is formed as illustrated.

Fig. 247. **To Bend a Board for a Circle,** if the given length is two feet saw in and bend the board up until the joint is closed. If the saw is very coarse it will raise at end about two inches. Therefore, saw in every two inches.

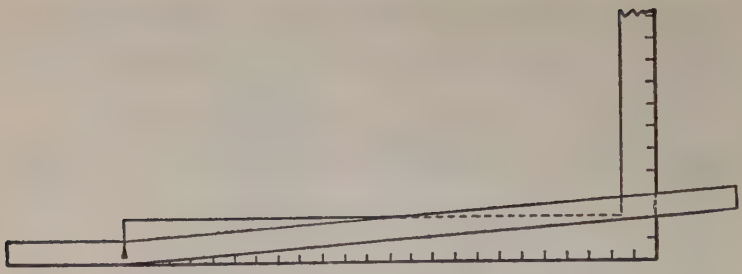

FIG. 247

Fig. 248. **To Find the Number of Courses of Shingles for a Roof.**—If there were four inches to the weather it would be three to the foot, and very easy. Therefore, to get any number practically as easy, is the point. If $4\frac{1}{2}$ inches, two courses would be 9 inches. To get one foot length and only 9 inches actual measurement, place one

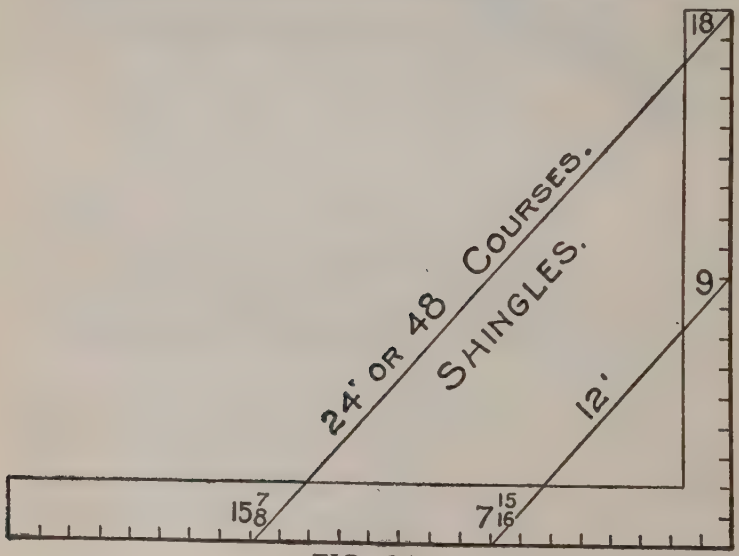

FIG. 248

foot at 9, swing around until the other end of the foot strikes the square, which is at 7 and 15-16. If the roof is 18 feet, measure from 18 parallel with the line just made, and it strikes the square at 15 and 7-8, and the line from 18 to 15 and 7-8

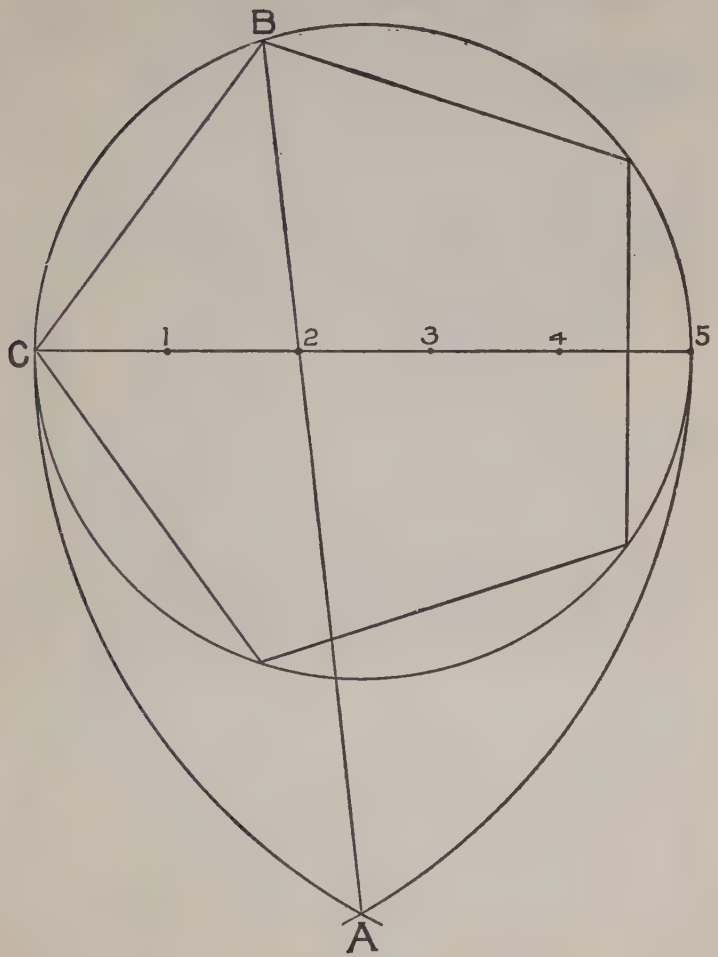

FIG. 249

is 24; two courses to every foot diagonal measurement gives 48 courses. This may seem a little complicated at first, but when it is fully understood it can be applied instantly. Any numbers can be applied the same way.

All of the foregoing problems given by Mr. Dwight L. Stoddard are useful and can be readily understood.

To Draw a Polygon in a Given Circle.—Divide the diameter of a circle into the number of parts that there are sides in the desired polygon, and with a radius equal to the diameter of the circle describe arcs cutting at A (Fig. 249). From A

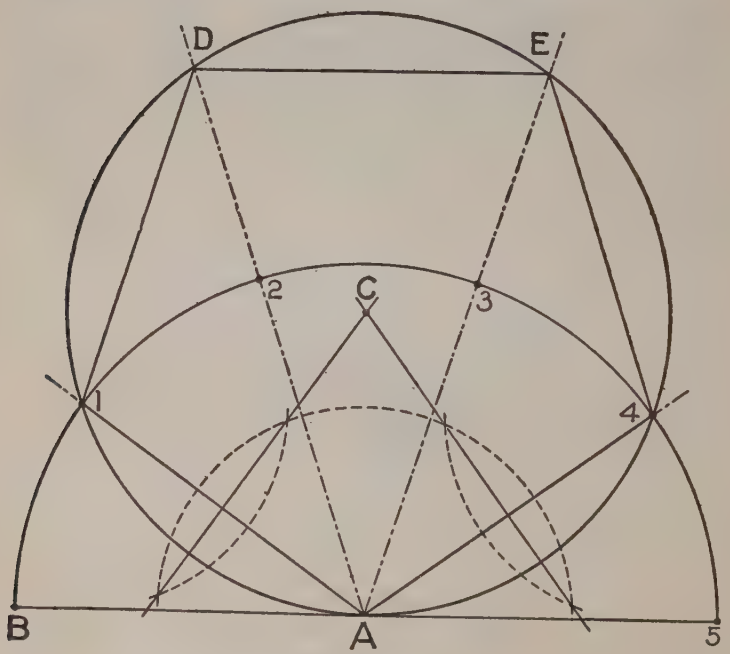

FIG. 250

produce a line, always passing through the second division of the diameter and extend until it cuts the circle, as at B. Then from B to C will equal the length of one of the desired sides of the polygon, from which the other sides can easily be spaced. The illustration shows a pentagon or five-sided figure.

To Draw a Polygon when the Length of the Side is Given.—Let the radius of a semicircle equal the length of the desired side of the polygon, as from A to B, and divide the semicircle into the number of parts desired in the polygon, as shown in Fig. 250. Produce lines from A through all of the points on the semicircle and bisect the two lower of these lines as shown will locate the center as at C. Then with C-A as radius describe a circle which will be the circumscribed diameter of the polygon. Then by connecting the points 1, D, E, etc., on the circle, the polygon will be complete.

To Divide a Given Line Into Any Number of Equal Parts.—Let A-B (Fig. 251) be the given line to be divided into five equal parts. From the point A draw the straight line A-C, forming any angle with A-B. On the line A-C, with any convenient opening of the compasses, set off five equal parts towards C; join the extreme points C-B; through the remaining points 1, 2, 3 and 4, draw lines parallel to B-C, cutting A-B in the corresponding points 1, 2, 3 and 4; A-B will be divided into five equal parts, as required.

There are several other methods by which

lines may be divided into equal parts; they are not necessary, however, for our purpose, so we will content ourselves with showing how this

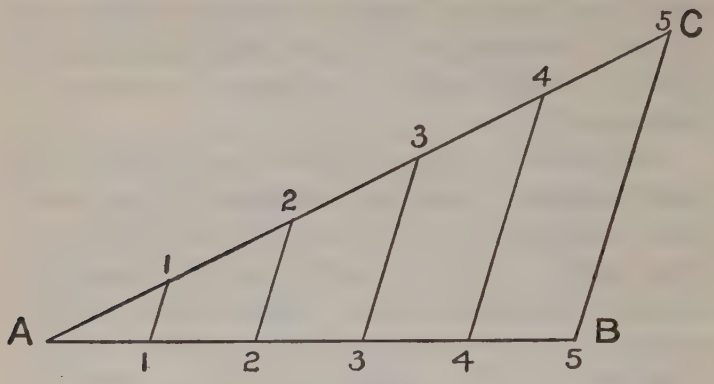

FIG. 251

problem may be used for changing the scales for drawings whenever such change is desired. Let A-B (Fig. 252) represent the length of one scale or drawing, divided into the given parts Ad, de,

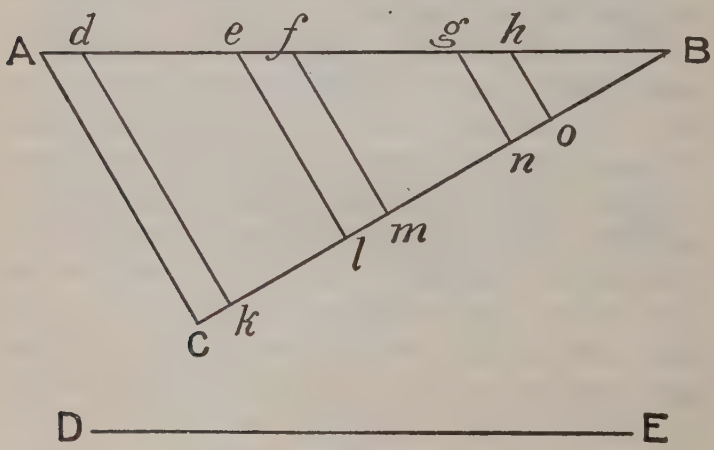

FIG. 252

ef, fg, gh and hB; and D-E the length of another scale or drawing required to be divided into similar parts. From the point B draw a line B-C= D-E, and forming the angle with A-B; join A-C, and through the points d, e, f, g, and h, draw dk, el, fm, gn, ho, parallel to A-C; and the parts Ck, kl, lm, etc., will be to each other, or to the given line D-E, as Ad, de, etc., is to A-B. By this method, as will be evident from the figure, similar divisions can be obtained in lines of any given length.

To Divide a Given Circle Into Any Number of Equal or Proportional Parts by Concentric Divisions.—Let A-B-C (Fig. 253) be the given circle,

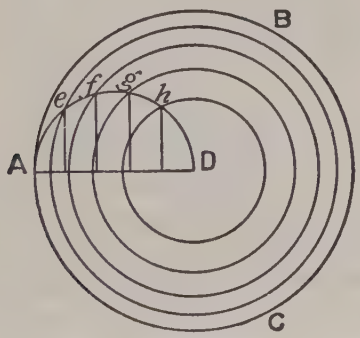

FIG. 253

to be divided into five equal parts. Draw the radius A-D and divide it into the same number of parts as those required in the circle; and upon the radius thus divided describe the semicircle: then from each point of division on A-D, erect perpendiculars to meet the semi-circumference in

e, f, g and h. From D, the center of the given circle, with radii extending to each of the different points of intersection on the semicircle, describe successive circles, and they will divide the given circle into five parts of equal area as required; the center part being also a circle, while the other four will be in the form of rings.

To Divide a Circle Into Three Concentric Parts, bearing to each other the proportion of one, two, three, from the center.—Draw the radius A-D (Fig. 254) and divide it into six equal parts.

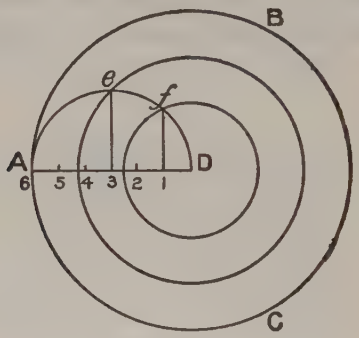

FIG. 254

Upon the radius thus divided describe the semicircle; from the first and third points of division draw perpendiculars to meet the semi-circumference in e and f. From D, the center of the given circle, with radii extending to e and f, describe circles which will divide the given circle into three parts, bearing to each other the same proportions as the divisions on A-D, which are as 1, 2 and 3. In like manner circles may be divided in any given ratio by concentric divisions.

To Cover a Circular Dome with Horizontal Boarding.—Proceed as follows: Let A-B-C (Fig. 255) be a vertical section through the axis of a circular dome, and let it be required to cover this dome horizontally. Bisect the base in the point

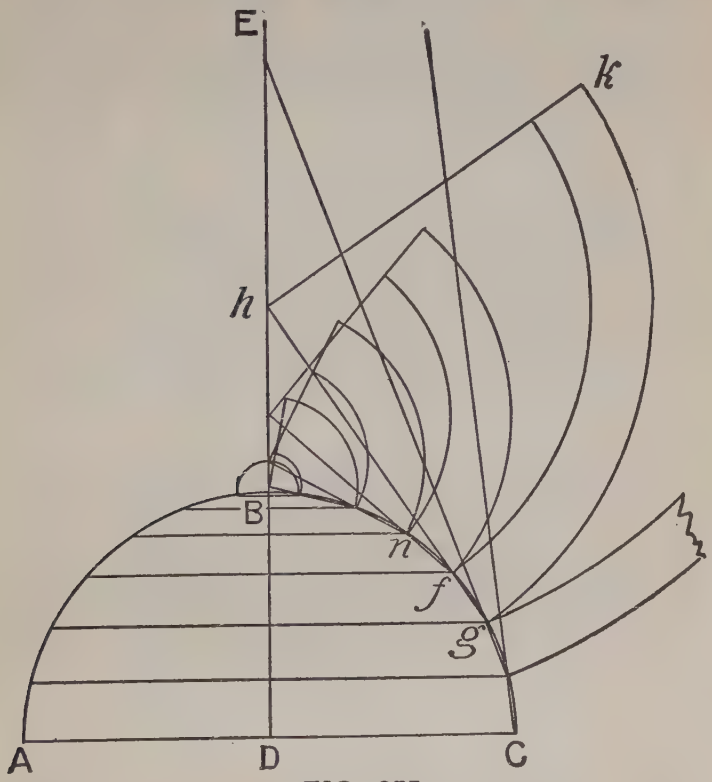

FIG. 255

D, and draw D-B-E perpendicular to A-C, cutting the circumference in B. Now divide the arc B-C into equal parts so that each part will be rather less than the width of a board, and join

the points of division by straight lines, which will form an inscribed polygon of so many sides, and through these points draw lines parallel to the base A-C, meeting the opposite sides of the circumference. The trapezoids formed by the sides of the polygon and the horizontal lines may then be regarded as the sections of so many frustums of cones, whence results the following mode of procedure: produce, until they meet the line D-E, the lines nf, fg, etc., forming the sides of the polygon. Then to describe a board which corresponds to the surface of one of the cones, as fg, of which the trapezoid is a section, from the point h, where the line fg produced meets D-E, with the radii hf, hg, describe two arcs, and cut off the end of the board k on the line of a radius hk. The other boards are described in the same manner.

To Cover a Circular Dome with Vertical Boarding.—The upper part of Fig. 256 represents the elevation of the dome, and the lower part represents the plan and the shape of the board in the stretch-out. Divide the diameter of the dome into spaces equal the width of the boards to be used. Divide one side of the elevation into any number of equal parts, as 1, 2, 3, etc., and from these points draw parallel lines down to the diameter of the plan as at C″B″. From C″ as a center draw lines C″D and C″E which represents the board in its respective place on the dome. From C″ as center and with the points 1, 2, 3, etc., on the diameter swing around to C″D and

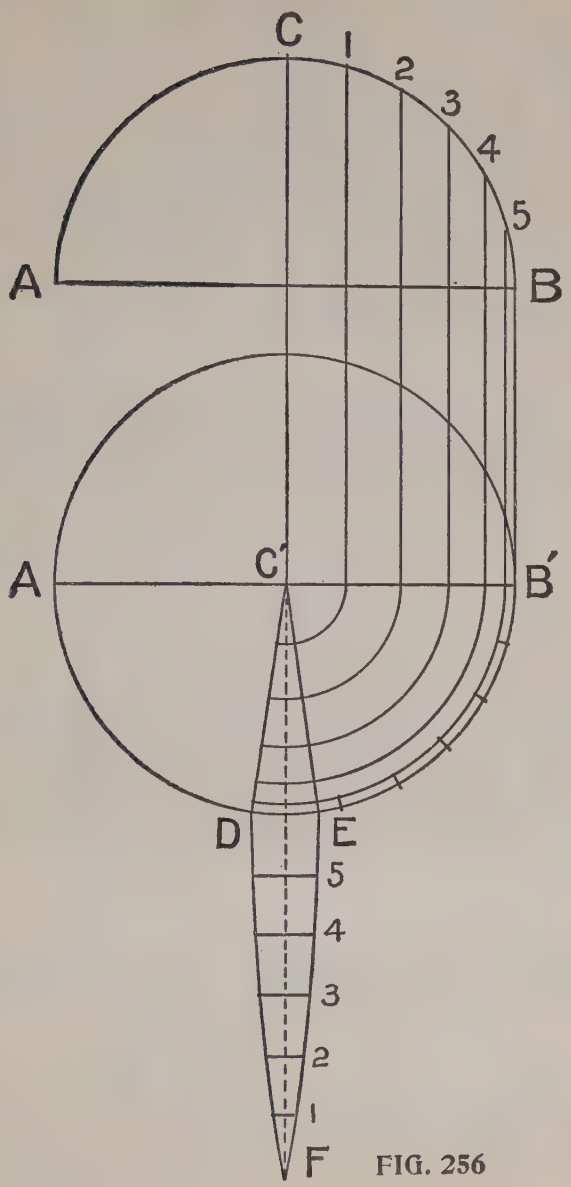

FIG. 256

C″E as shown; and on the line C″F lay off the distance 5, 4, 3, etc., which will be the correct length or stretch-out of the board. The length of the cross lines between C″D and C″E governs the length of the cross lines of the board. Care should be taken to not have the boards too wide, as the narrower the boards the better they will fit the dome.

To Cover a Conical Roof with Vertical Boarding.—This is a form quite generally used for the sheathing of tower roofs, and the illustration (Fig. 257) needs but little explanation. As in the former figure the upper part of this illustration represents the elevation, and the lower part the plan. The elevation shows the frame work of the rafters with the cross pieces in between the same.

With A as a center and with the length of the rafter as a radius describe an arc, as at B-C, which will represent the bottom end of the roof boards, and on this lay off the described width of the boards to be used, as at B-D, and connect D with A. Then A-B-D will be the correct shape of the board. The cross pieces between the rafters are found as shown in the plan at 1, 2, 3, etc.

Fig. 258 shows the **manner of finding proportions of a small moulding which is required to miter with a larger one or vice versa.**—Let A-B be the width of the larger moulding, and A-D the width of the smaller one; construct with these dimensions the parallelogram A-B-C-D, and draw its diagonal A-C. Let A-B be the section of

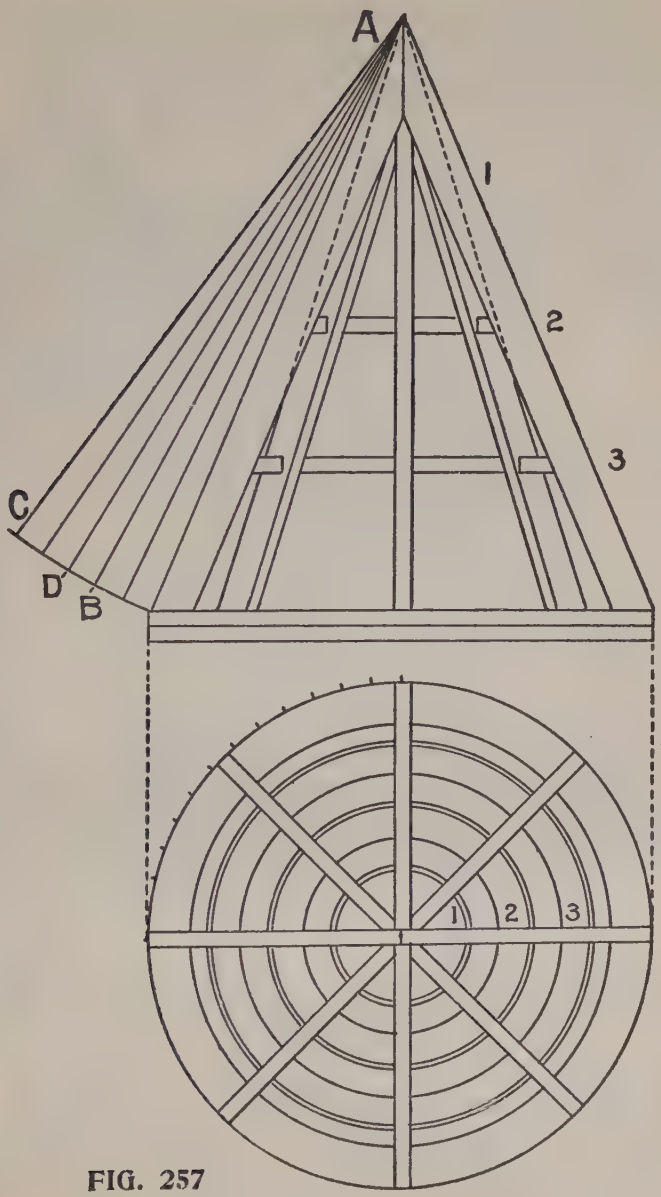

FIG. 257

the moulding which we wish to reduce to member with a moulding the width of A-D. Draw any number of parallel lines to B-C, cutting the line

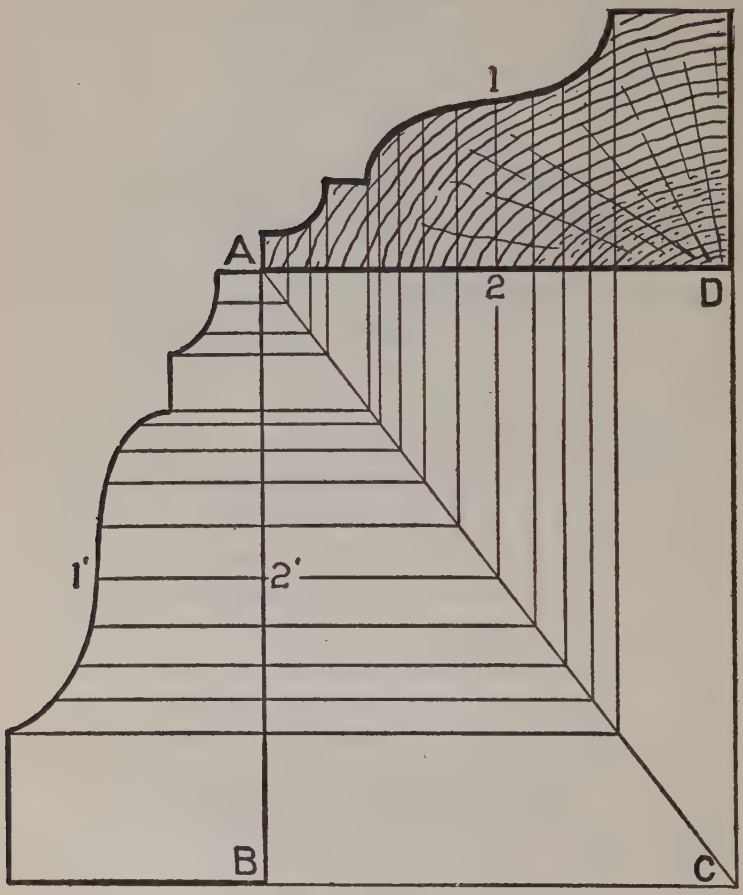

FIG. 258

A-C, from which points draw lines parallel to D-C and beyond the line A-D. From the latter set off the thickness of the moulding on the cor-

responding lines, as ½ will give the contour of the mould for the lesser width or vice versa.

To Kerf a Board to Bend to a Given Circle.—Suppose the radius of a circle to which we wish to bend the board to be three feet, as shown in Fig. 259. Take a piece of the board which we wish to bend and with the saw make a kerf about three-quarters the way through, being careful to cut to the same depth on both edges, and place

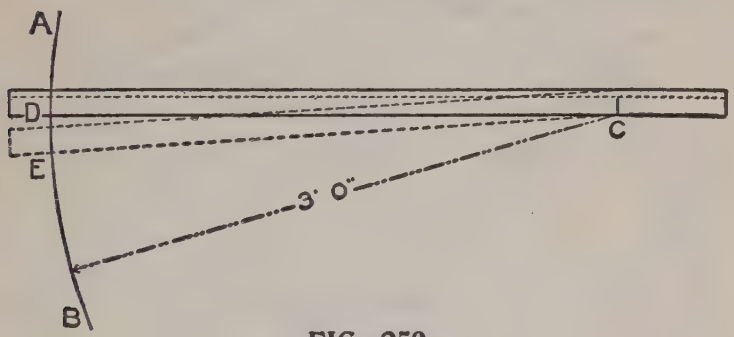

FIG. 259

the board along the line C-D with the kerf at the center as at C. Spring the board until the kerf is closed and the distance the straight edge of the board has moved along the line of the arc A-B will be the proper distance to make the kerfs as at E-D.

The Protractor.—In Fig. 260 we show a scale of degrees, commonly called a protractor. This we believe will be found quite convenient to the woodworker in general, because any angle may be obtained from it by simply placing the bevel to the lines as shown, and as it is the degrees that

determine the angles, any of the regular polygonal miters may be accurately found by setting the bevel to the angle of their miters. Thus the angles of the square figure are 90 degrees and the miter must necessarily stand at one-half that, or 45 degrees. The angles of the equilateral triangle are 60 degrees and the miter is 30 degrees.

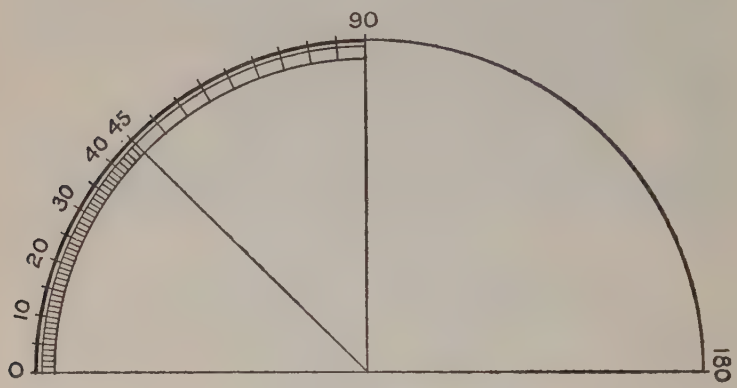

FIG. 260

The angles of the hexagon are 120 degrees, the miter is 60 degrees, etc. The reader will notice that only one-half of the protractor is divided into the degree divisions. The reason for this is that it is sufficient to obtain any angle desired.

Part V

QUESTIONS AND ANSWERS. Framing a circular porch — End cut of hip to rest on adjoining roof — Cutting rafters — How to find length of hip rafters — Seat and plumb cut of hood rafters — Side cut of the hip — How to cut a hip rafter — A square pitched roof — Miter cut on a moulding — Length and cuts of hip rafters — To square a tapering timber — Explaining board measure — Framing a gambrel roof — Side cut of the jack — Lenght of hip rafter — How to find length of brace — Fitting a hip jack — Miters for uneven pitches — Valley cuts of planceer —Exact lenght and cut of valley — Regular and irregular rafters.

Framing a Circular Porch.

Question: Can you tell me the best way of framing a circular porch?

Answer: The accompanying illustration at Fig. 1 shows the method that we have used in our own work for a number of years, and is probably as good as any other. The central part of the illustration shows the frame work of the floor joists with a portion of the flooring in position.

There should be supports at C, B and D. From C to D is one-quarter of a circle, and this divided in the center, as at B, then the straight lines C-B and B-D are equal to the sides of an octagon with a circumscribed radius of seven feet and eight inches, which is the width of the framework of the porch and the length of the sides may be found by multiplying the radius by the decimal 9.18, which equals five feet ten and three-eighths

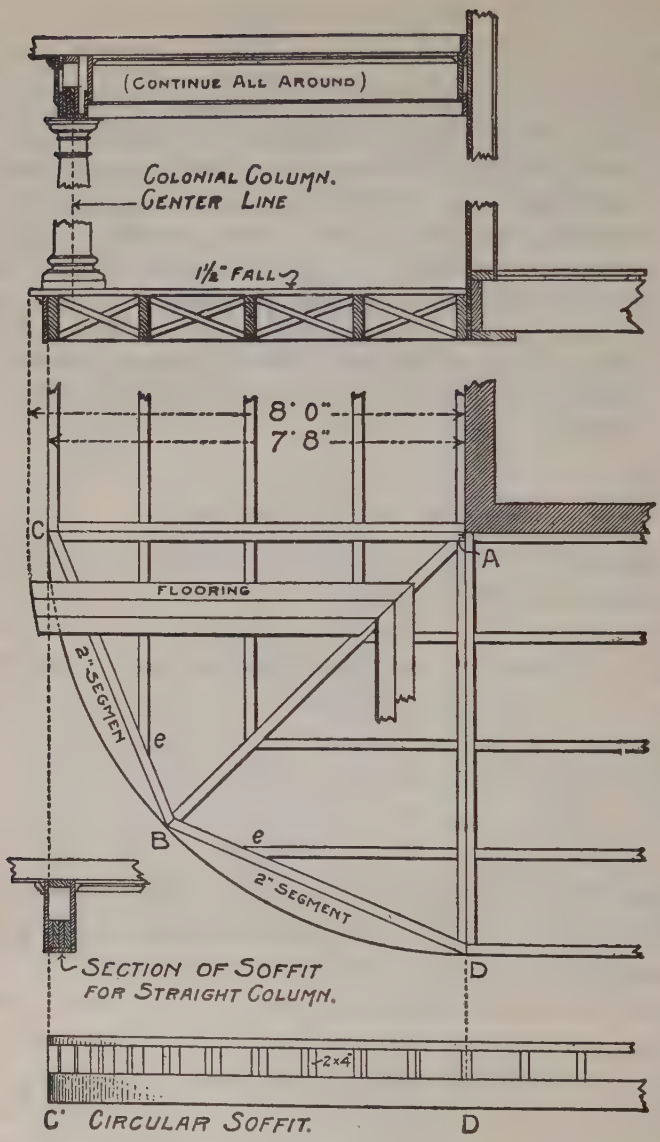
(CONTINUE ALL AROUND)
COLONIAL COLUMN.
CENTER LINE
1½" FALL
8' 0"
7' 8"
C
A
FLOORING
2" SEGMEN
e
B
e
2" SEGMENT
D
SECTION OF SOFFIT
FOR STRAIGHT COLUMN.
2x4
C' CIRCULAR SOFFIT.
D

FIG. 1.

inches, and is the length to cut the side pieces, and is also the length of the chord of the segment to form the circle to receive the base.

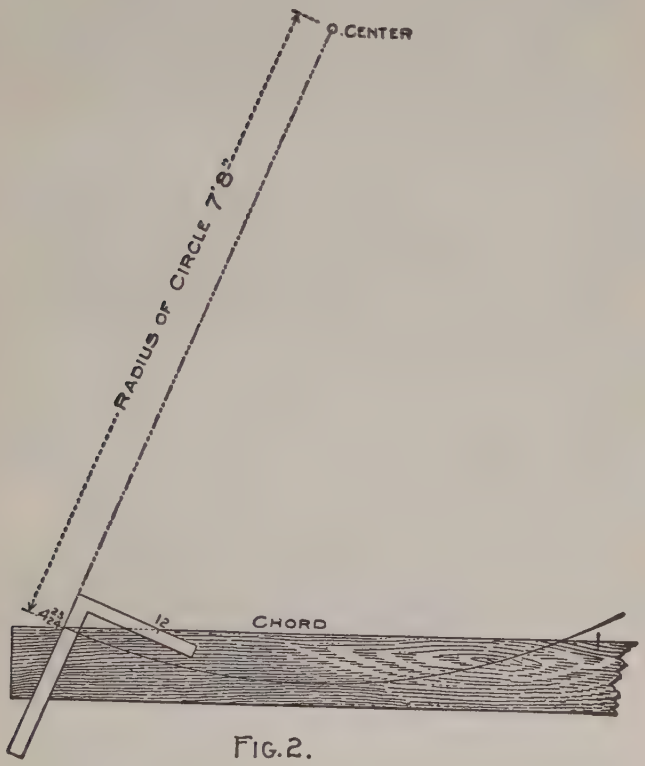

FIG. 2.

In the absence of the above decimal or in case a person is not apt in figures, these parts may be found as shown in Fig. 2. By placing the square on a board, from which the segment is to be cut,

with the figures that give the octagon cuts and lay off the radius in line with the blade, as shown, describe the arc, and it is ready to cut. The figures shown on the square will give all of the cuts required in the frame work about the octagon, as the blade will give all of the cuts at B, also at the other end of the side pieces at C and D. The tongue will give the cut at e and e. The other cuts are the square or on the 45-degree angle. Thus, from this it will be seen that all of the pieces can be successfully framed without first building a part of the framework and scribing the other pieces to it as is the general custom.

There should be four of the segment pieces gotton out, setting one flush with the top edge and one at the lower edge of the joists. The upper ones should be of one and three-fourths inch stuff, same as the joists, while seven-eighths will be sufficient for the lower member. Set blocks between these segments, nailing them well to the joists, also set a few blocks flush with the face of the segments, which makes an excellent form to secure the base.

The ceiling joists are usually put on the narrow way of the porch with an angle piece same as at A-B, on which to form the miter joint of the ceiling.

To form the soffit we use seven-eighths by six or eight-inch sized boards and spring them to their proper place just the same as building a circular girder. The first board should be sprung to a form and the next board well nailed to this

one, and so on till the soffit is to the required thickness or strength, as it is not always necessary to build to the full width desired as it can easily be furred out to the required width. The soffit should be continuous; that is, for the straight part as well as for the circle. Long boards should be used so as to lap well around the circular part, being careful not to break joints on the circular part or at C or D.

A soffit if properly built in this way will not necessarily need a column set at B, as it will be self-supporting. If straight columns are used the outer face of the framework should be flush with the framework below, but if tapered or colonial columns are to be used, then the center of the soffit should rest over the center of the column, as shown in the upper part of the illustration of Fig. 1.

In case a deep frieze is wanted, it may be had by building on top of the soffit girder with blocks, and putting a formed plate on these. For all circular mouldings, it is better to have them solid, and they will then always stay in place, as there will be no kerf joints to open up after the work is completed.

End Cut of Hip to Rest on Adjoining Roof.

Question: Will you please give a rule for cutting the bevels with aid of the steel square, on the bottom end of a hip rafter with "square back" when the same sets on the sheathing boards at comb, as in case of building an addition to an old house, as shown in sketch?

Answer: Fig. 1 is a reproduction of the sketch. The pitch of the two roofs is the same but is not necessarily so, as it is simply one roof joining another and may be of different pitches. If the new hip was to rest on a level plane, as in case of

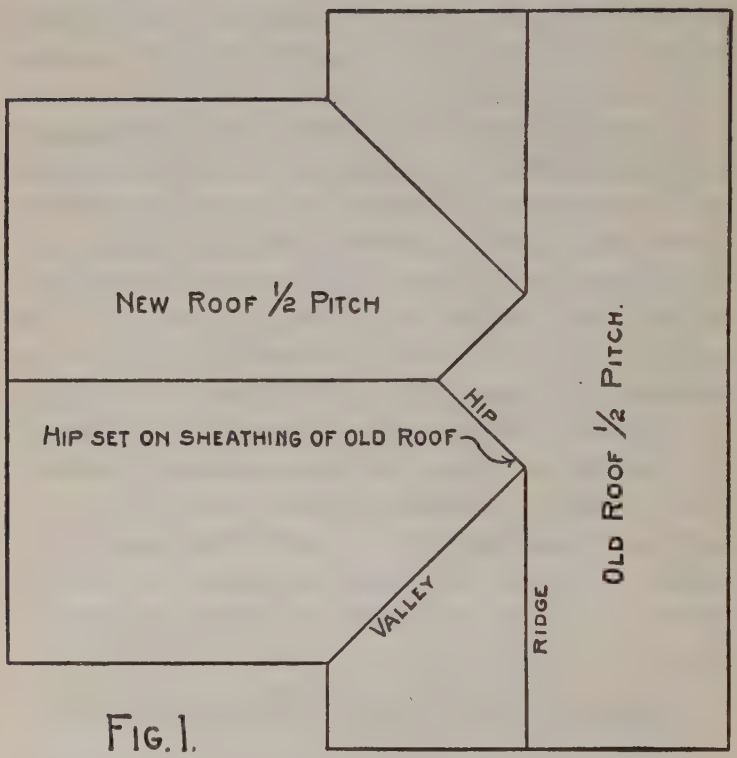

FIG. 1.

a plate, then the seat cut would be 17 and 12, as shown by the broken lines of the square in Fig. 2, But since the seat cut must rest on the sheathing boards of an adjoining roof, we simply apply the square with the figures that give the seat cut for

the corresponding hip for the latter to the seat cut line of the new hip, as shown in the illustration. However, this only gives the angle across the face or side of the hip and another angle across the "square back" of the hip is

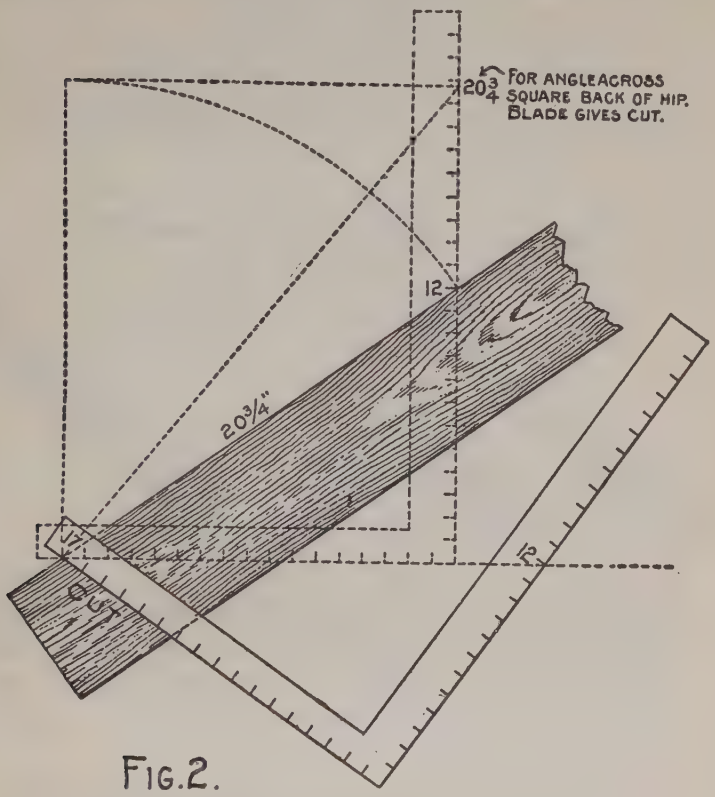

FIG. 2.

necessary to give solid bearing on the roof. This, however, is the same angle as that used at the top end to fit against the ridge board, and in this case is 17 on the tongue and $20\frac{3}{4}$ on the blade.

The blade giving the angle for cut. The dotted lines in connection with the upper square show why these figures are taken. From these illustrations it will be seen that the cut in question is the same as the tail end cut of the hip or valley.

Cutting Rafters.

I would like to add a small item which may set right some of the younger members of the craft and a few of the older heads who never paid any attention to it; in fact, I saw a contractor cut the rafters on a three thousand dollar house

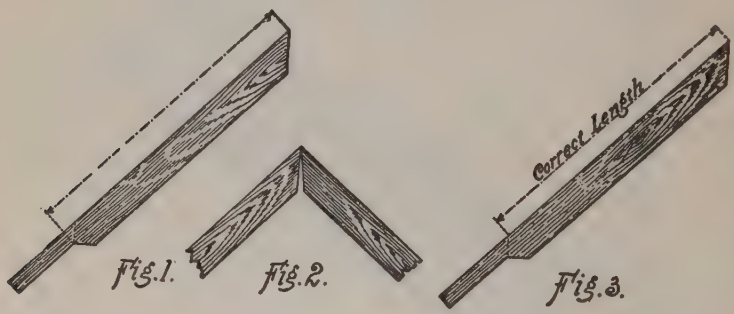

in the same faulty way. It is in the manner of adding the projection for cornice. Fig. 1 is the wrong way and makes the rafters too short, causing the ridge joint to open, as shown in Fig. 2. The right way is shown in Fig. 3.

How to Find Length of Hip Rafters.

Question: Please give me the best way to get the length of hip rafter, cut on any degree.

Answer: Take its run for one foot, which is always 17 on the tongue of the square, and the

rise given the common rafter on the blade. The length from these figures measured across the angle of the steel square will be the length per foot run of the common rafter. These figures on the square also give the seat and plumb cuts of the hip. To get the side cut of the hip take 17 on the tongue and the length of the hip for a one foot run, as described above, on the blade and the blade will give the cut.

Seat and Plumb Cut of Hood Rafters.

Question: What is the rule for cutting hood rafters for a barn if the lower cut is 20 inches and the upper cut is 14 inches? What will be the bevel cut on the upper end of the hood rafter, the pitch of the barn to be 9 inches to 12 inches?

Answer: The seat and plumb cut of hood rafters is identical with that of the common rafter. In other words, if the cuts of the common rafter are 20 and 14, as stated, then the same would give like cuts for the hood rafters, but the pitch would be $8\frac{3}{8}$ to 12 instead of 9 to 12, as stated. Consequently, $8\frac{3}{8}$ and 12 would give the same result as 20 to 14.

Side Cut of the Hip.

Question: Will you give me the rule to get the side cut of the hip?

Answer: When the seat of the hip or valley rests at an angle of 45 degrees with that of the common rafter the rule is this: Take the length of the seat or run on the tongue and the length

of the hip on the blade and the latter will give the cut; or taking the scale of one foot it is 17 on the tongue and the length of the hip for a one foot of the gable on the blade: the blade will give the

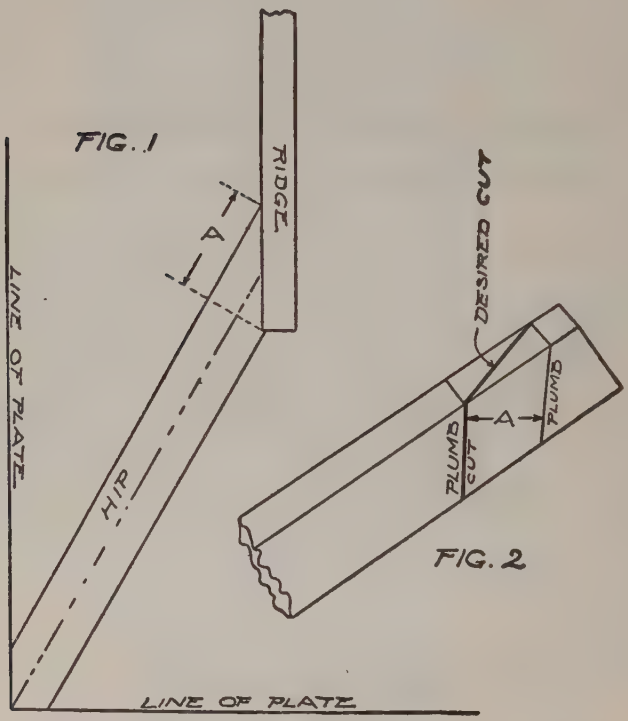

cut across the top of the unbacked rafter. The answer to the question asked would be 17 on the tongue and $20\frac{3}{4}$ on the blade—blade gives cut. When the seat of the hip does not rest at an angle

of 45 degrees it can be had as shown in the diagram. Explanation of diagram: Side cut of hip, when the seat of the hip does not rest at an angle of 45 degrees. Fig. 1 shows the position of the hip. Square across the back as at A and lay off this same amount from the plumb cut as at A in Fig. 2, and the diagram line across the back will be the proper angle.

How to Cut a Hip Rafter.

Question: I wish you would tell me how to cut a hip rafter, one for a house with a deck. I mean like this: The height from ceiling joist and the size of the deck will give the length of the hip rafter.

Answer: Deduct the width of the deck from the width of the building and proceed as for the ordinary hip. In other words, if your house is twenty feet wide, and has a deck six feet wide, which, taken from twenty feet, leaves fourteen, and half of fourteen equals the run of the common rafter. Now, if your roof has an eight-inch rise to the foot, seventeen and eight will give the seat and plumb cuts. For the side cut take seventeen on the tongue and the length from seventeen diagonally across to eight (which is eighteen and three-quarters) taken on the blade and the latter will give the cut.

A Square Pitched Roof.

Question: Will you give me the correct figures of a square pitched roof for a building twenty-

two by twenty-eight feet long, and what rise to the foot? Some of our carpenters have different ideas regarding square pitch.

Answer: Pitches are reckoned by the proportion given the span of the common rafters, as one-fourth, one-third, one-half, etc., meaning that the roof has a rise of that proportion to that of the span. Referring to the question of square pitch many carpenters apply this term to the half pitch, because the angles of the rafters rest at ninety degrees with each other and therefore make a square angle at the peak, but this is not a proper term to use in designating this pitch. The figures to use on the steel square are as follows: Twelve and twelve give the seat and plumb cuts of the common rafter, and seventeen and twelve that for the hip or valley. These figures also give the side cut of the jack, the seventeen side giving the cut while the twelve side will give the cut across the face of the roof boards to fit into the valley or over the hip. For the side cut of the hip, take seventeen, and nineteen and seven-twelfths, the latter will give the cut across the top of the unbacked hip, or if it has been previously backed, use the same figures as for the side cut of the jack. The lengths for a building twenty-two feet wide would be fifteen feet and six and two-thirds inches for the common rafter, and nineteen feet and seven-twelfths inches for the hip, which would be taken on the top backing line. If the jacks are set on two-foot centers the common difference will be prac-

tically two feet ten inches. Or if they are set on one foot four-inch centers the common difference will be one-third less.

Miter Cut on a Moulding.

Question: In making a miter cut on a moulding, for instance to form a right angle, would you designate the cut as a 45 or 90-degree one?

Answer: A miter is reckoned by the angle in degrees that it stands between the horizontal and perpendicular. Therefore an angle of 90 degrees

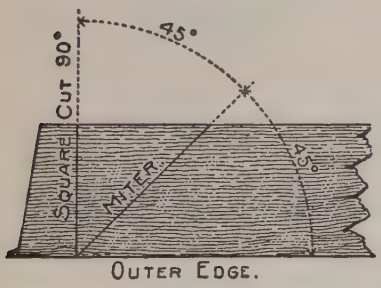

FIG. 1.

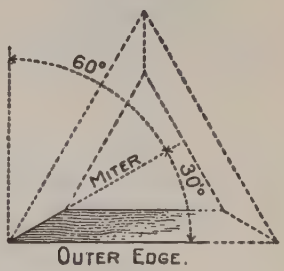

FIG. 2.

is not properly a miter. Some claim that it is a butt miter, but we differ with them there. It is simply a square cut and may be properly called a "butt joint," but never a "miter joint." To find the angle on the steel square to obtain the miter we divide 180 by the number of sides in the frame. Thus, the quotient for the right-angle corner or four sided frame is 45, and represents the angle of the miter as shown in Fig. 1. In this case it is at the half-way point between the horizontal and the perpendicular. Therefore the

degree of the miter and its complement in this case are equal. In Figs. 2, 3 and 4 are shown the angle of the miter for three, five and six-sided

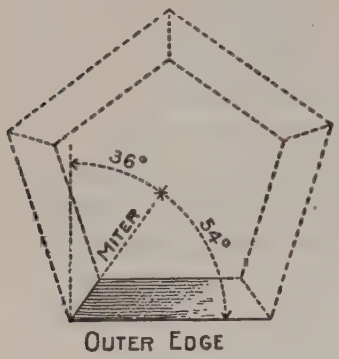

FIG. 3.

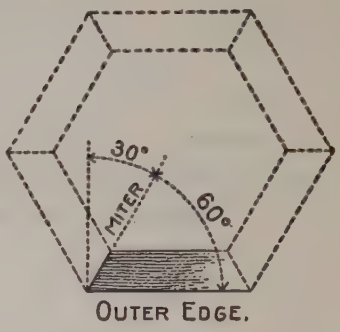

FIG. 4.

frames. In each case it is the complement angle that must be taken on the steel square to obtain the miter.

Length and Cuts of Hip Rafters.

Question: I wish you would explain if the figures 17 and the rise of the roof will give the length and cuts of all hip rafters where all parts of the roof are same pitch, or will it only cut those that are less than square pitch?

Answer: All of the cuts and bevels about a roof are contained in some parts of an imaginary cube. In the accompanying illustration we show a cube twelve inches square at the base. From this, it will be seen that the diagonal of the base is shown as being 17 inches on the tongue of the square in connection with the same. However,

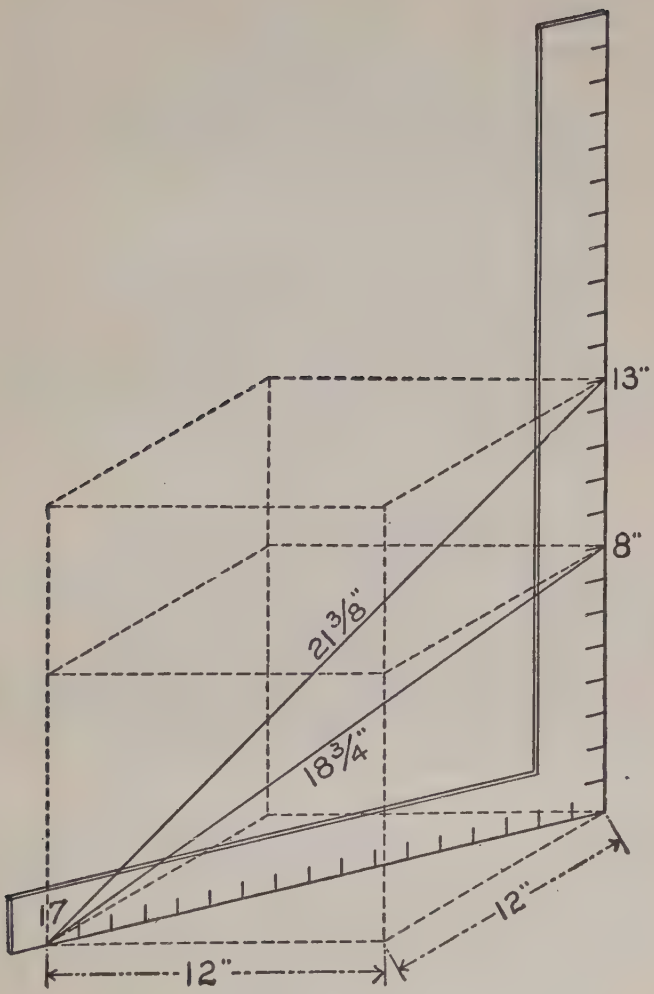
13"
8"
21 3/8"
18 3/4"
17
12"
12"

the real length is only 16.97 + inches, which is so near 17 that it is near enough as far as the cuts are concerned. This applies to the seat cut of the hip rafter so long as the adjoining pitches of the roof are the same, regardless of the pitch given the roof. In the illustration we show two pitches, that for the 1-3 pitch or 8 inches rise to the foot, and 13-24 pitch or 13 inches rise to the foot. The solid lines from 17 on the tongue to these figures on the blade represent the position of the hip, and the figures on the same represent their corresponding lengths per foot run to that of the common rafter. 17 taken on the tongue and these lengths ($18\frac{3}{4}$ and $21\frac{3}{8}$) taken on the blade will give the side cut of the unbacked hip for the respective pitches, the blade giving the cut.

Explaining Board Measure.

Question: I would be very glad if you would explain the meaning of the figures running parallel with the blade of the square.

Answer: There are squares and squares; in other words there are many squares that contain figures on the body of the blade for various purposes.

A few years ago we were called on to prepare drawings for the patent office for a square to contain a rafter table on the blade of the square. After the drawings were filed in the patent office the applicant was cited to more than a dozen squares on which he was infringing on the rights of others. This led to an investigation of the

claims set forth by the different patentees, some of them dating back for a number of years. Most of these were found to contain a lot of figures more or less confusing and otherwise impracticable. If these parties had known the true use of the right angle formed by the blade and tongue of the square and the simple scale thereon, they would not have applied for letters patent for their invention and would have been both wiser and wealthier.

Besides the squares referred to, many others have been patented, but very few of them have ever been placed on the market. However, some of them were, and it may be one of these squares that our friend possesses, but we presume the one he has contains the board measure which has been stamped on most all of the squares for these many years. The fact that it has not yet become generally known by the men for whom it was intended shows it to be of but little importance. In fact, we can not now, after more than twenty years' experience among builders, recall a single instance where we saw this board measure referred to to find the contents of a board. Yet it is simple and easy to learn and is as follows: Always look under 12 on the blade for the length of the board and move to a point under the desired width and the figures recorded there represent the contents of the board in feet and inches in lineal board measure. Thus, a board nine feet long and nine inches wide contains six feet and nine inches or six and three-quarters feet.

To Square a Tapering Timber.

Thinking that this design would be of value to many readers we submit same, though it may have been used by carpenters for many years. It relates to the squaring the end of a tapering piece of board or timber, as shown, using the common T bevel. Setting the same so that the blade will reach diagonally across face and mark along the edge of the blade. Note the

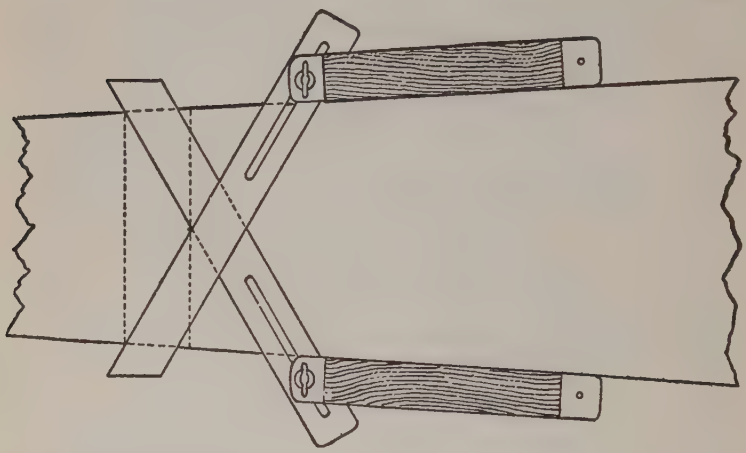

center of the line and reverse the bevel to the other side and set to same. Set bevel blade to these centers and the timber can be squared around on all four sides as easily as if it was a square timber.

Framing a Gambrel Roof.

Question: Would like to know in what proportion to frame a gambrel roof building 38 feet

in width and be self-supporting. How high would you make the knuckle joint to be in proportion with the width of the building?

Answer: We show in the accompanying illustration a gambrel roof. In this the knuckle is placed at the half-way point between the plate and the comb, thus making both sets of the rafters the same length and cuts. A roof of this

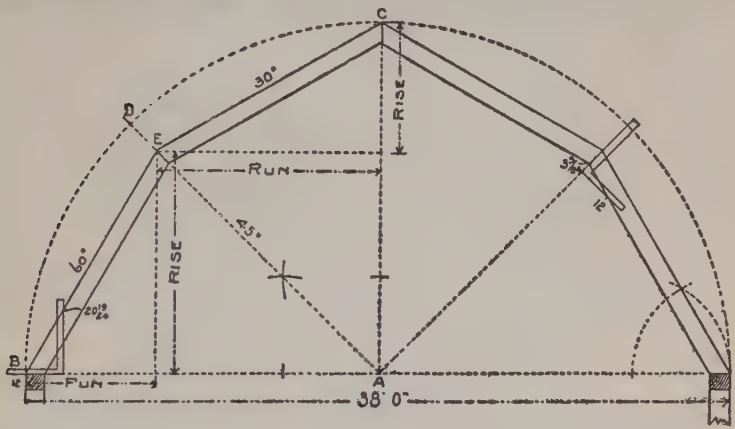

proportion can very easily be laid out with the compass alone, as shown by the diagram. A, B represents the total run; A, C the total rise; and are the same as in the half-pitched roof. 12 and 20 19-24 will give the seat and plumb cuts, while 12 and 3 5-24 will give the cut at the knuckle.

Side Cut of the Jack.

Question: How would you obtain the side cut of the jack with the aid of the steel square?

Answer: The question may seem very simple to the majority of the readers, and it is as far as

the square-cornered building is concerned, but very few understand the true principle involved. We dare say most every one would say without hesitation, "Take its run and length on the members of the steel square and cut on length," or they may say take the run and length of the common rafter which gives the same result and gives it correctly, provided the sides of the roof are of the same pitch and the corner is at right angles, but

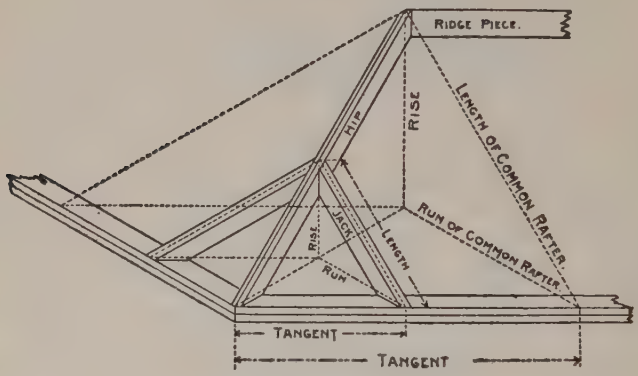

as a matter of fact the run has nothing whatever to do with this or any other shaped corner. What then? It is the tangent.

In the right-angled corner with an even pitched roof, the seat of the hip or valley rests at an angle of 45 degrees from the plates, and being at the half-way place the run is equal the tangent and for that reason the run has been given the credit which rightfully belongs to the tangents. Practically all of the books on the subject of

traming with the aid of the steel square that have come under our notice make this fatal error and fhose that do not, fail to give the cause and effect. We say fatal because the would-be learner is thrown off the track and his further progress beyond the ordinary hip roof with such teachings is effectually blocked.

The general rule is, take the length from the corner of the plate to the seat of the jack (which is the same as the tangent) to scale on one member of the steel square and the length of the jack on the other. Cut on the length. The illustration shows the parts to take on the square. This rule applies to any kind of a corner or pitch. If one side is steeper than the other, then the respective sides must be treated in like manner, but separately.

Length of Hip Rafter.

Question: Will you explain how to get the length of a hip rafter for a half-pitch roof for a building 17 feet 7 inches wide, making 8 feet 9½ inches in the run? I take 17 and 12 on the square eight times for the 8 feet in the run. What I want to know is how to get the 9½ inches. Also how to get a valley rafter for a gable of half-pitch to fit over another of three-eighths pitch.

Answer: The reason 17 is used is because it is the practical length of the diagonal of a one-foot square, and 12 is used because it represents the half-pitch to a one-foot run as shown in Fig. 1. Therefore, these figures taken on the steel square

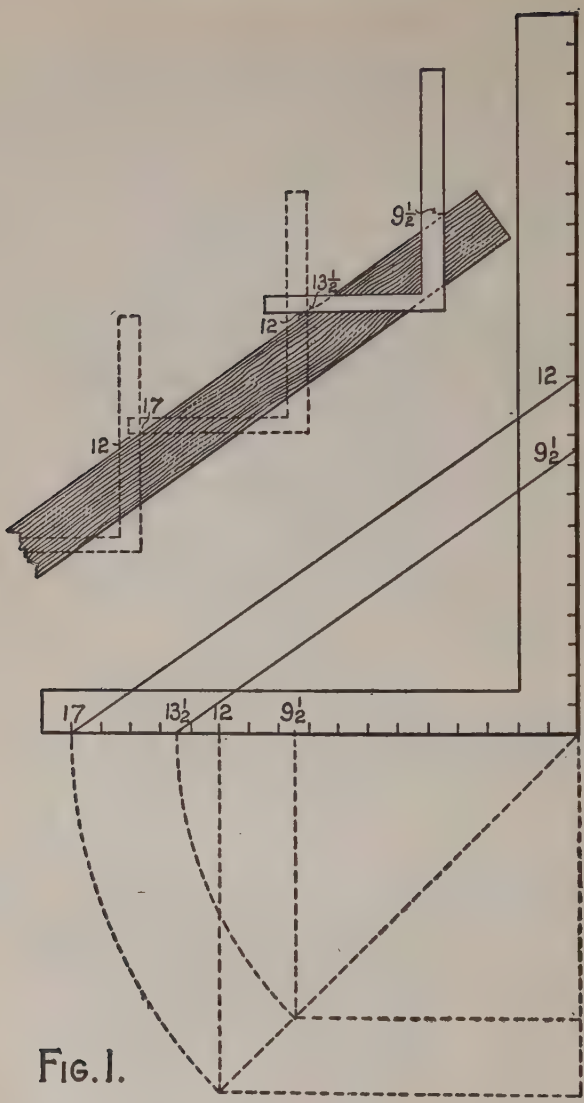

FIG. 1.

eight times will give the length for the 8 feet in the run, and for the 9½ inches proceed in the

same way taking the diagonal of $9\frac{1}{2}$ inches, which is $13\frac{1}{2}$, and a line drawn from $13\frac{1}{2}$ parallel with the one from 17 to 12, and the point of intersection on the blade will be the figures to use for

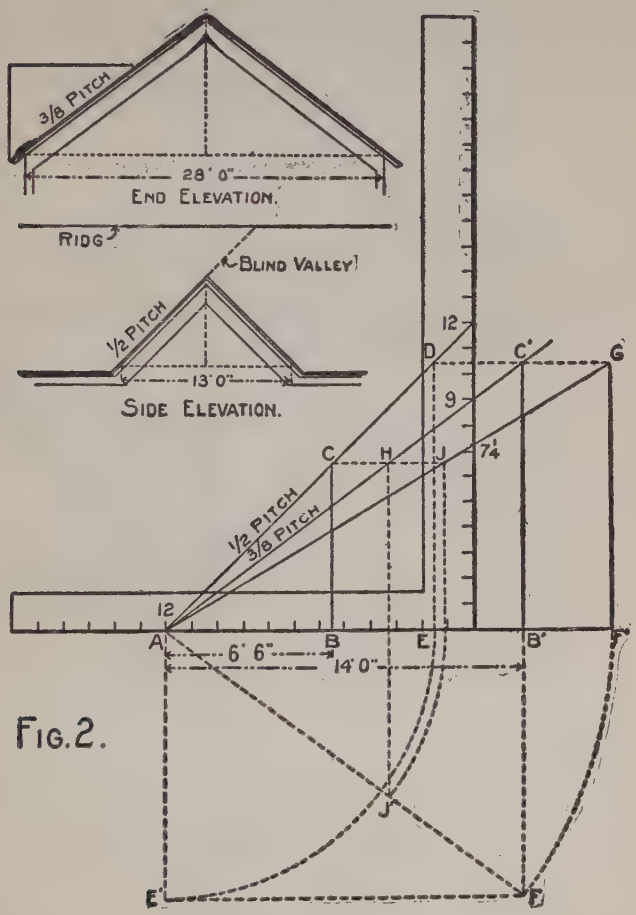

Fig. 2.

the last application of the steel square to obtain the length for the extra 9½ inches in the run. In the case of a half-pitch, the rise being equal to the run, the figures on the blade are the same as those in the run. This should not be allowed to confuse, as it does not occur in any other pitch. To get the length of valley you wish, first lay off

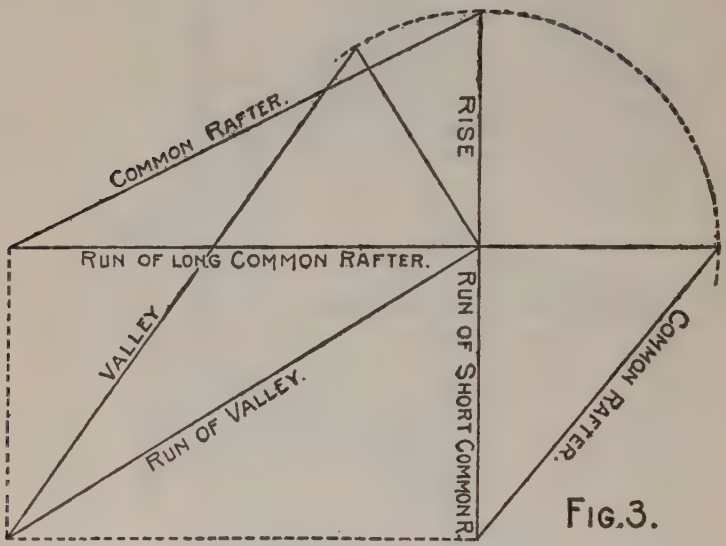

FIG. 3.

the pitches 12 to 12 and 12 to 9, as shown in Fig. 2. Now, assuming that the run for the half-pitch is 6 feet 6 inches, and that for the three-eighths pitch is 14 feet, we lay off these lengths on the run as shown at A B and A B′. Square up from B and B′ to the respective pitches intersecting at C and C′. Then A C will be the length per one-inch scale for the common rafter for the half-pitch,

and A C′ will be the same for the three-eighths pitch. Now for the length of the valley, square over from C′ to D and drop to E on the run, and this transferred to A E′ represents the end and A B′, the side of a plan whose diagonal A F will represent the run for the long valley to catch the ridge of the main gable, and this transferred to F′ and erect the rise F′ G, and draw the line A G which will be the length of the long valley, and by squaring over from B C intersecting A G at J. Thus A J will be the length for the short valley and its run will be A J. The point at H is at the intersection of the ridge of the half-pitch with the main roof. J G represents that part of the long valley commonly called blind valley. I trust the elevations in connection with this illustration will make the subject clear. When the roofs of different pitches are of the same height it is quite an easy matter to arrive at the length of the valley as their runs form the sides of the plan as shown in Fig. 3, which needs no further explanation.

How to Find the Length of Brace.

Question: Please explain how to get the length and cut of the brace, as shown in accompanying diagram.

Answer: The first illustration is as per sketch. The length is determined from the run and rise, same as for the ordinary brace, but the line of measurement instead of being along the edge of the timber (or a line parallel with it) is on a diag-

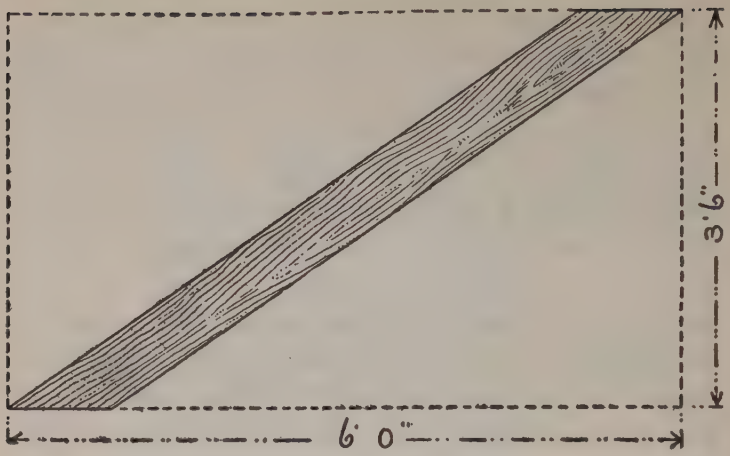

FIG. 1.

onal line across the face of the timber, as shown in Fig. 2. The run and rise taken to a scale on the steel square and applied to this line, will give the cuts as shown. The tongue giving the cut

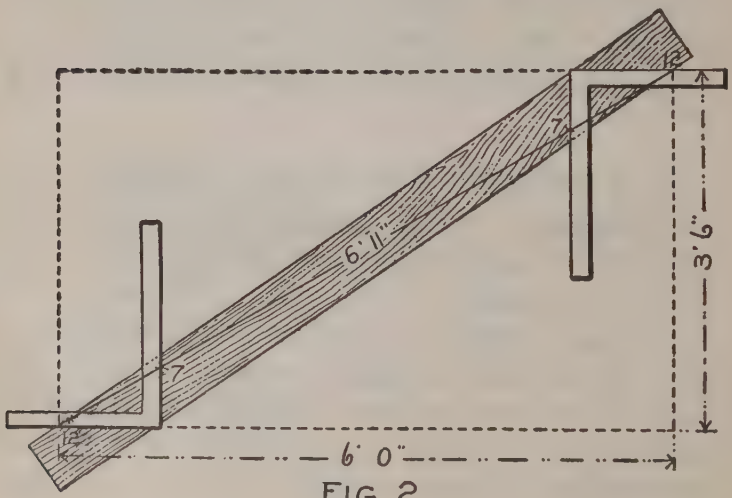

FIG. 2.

for both ends. The figures used on the square can be anything that is in the ratio of those of the run and rise, as 6 and $3\frac{1}{2}$, 12 and 7, 18 and $10\frac{1}{2}$, etc.

Fitting a Hip Jack.

Question: How are you going to fit a hip jack on side cut of 45 degrees when the cut is practically 12 and 17 cut on 17?

Answer: Yes, the side cut of the jack is 12

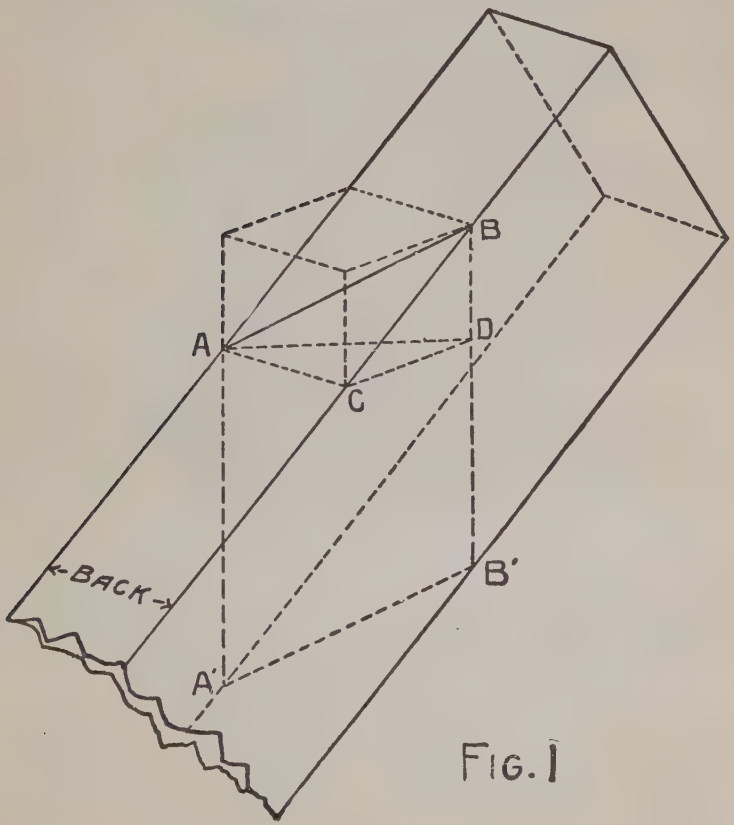

FIG. 1

and 17 cut on 17, and is the same as at A-B in Fig. 1. After this cut has been made cut off the peak end of the jack on a line parallel with the seat cut as C-D, and it will be found that the side cut is at an angle of 45 degrees or A-D with the sides of the rafter as at C-D, though it took 12 and 17 to get it on the back of the rafter. What is true of this is true of any other pitch, provided the building is square-cornered. If it be an octagon roof, then the angle would be at 22½ degrees. If it be for a hexagon roof, the angle would be at 30 degrees with the sides, etc.

Miters for Uneven Pitches.

Question: Will you please explain how to make the cornice member in the angle of unequal pitches? I have found the steeper pitch drops below the other. Will raising the plate make any difference? Would also like the figures to use in mitering the mould, facia and plancier.

Answer: Yes, the plate for the steeper pitch must be raised. With the question the accompanying roof plan is enclosed, with a 5-12 pitch intersecting a ½-inch pitch at the valley. Taking this for an example, we show in the illustrations the two pitches in connection with the steel square. The answer is found in the difference of the rise in the width of the cornice. If the cornice be 20 inches wide, then the plate for the steeper pitch must be as from A to B higher than the plate for the lower pitch. The plancier for a roof of this kind should be level and finished with a

return at the gable, consequently the miters for the several parts would all be at an angle of 45 degrees.

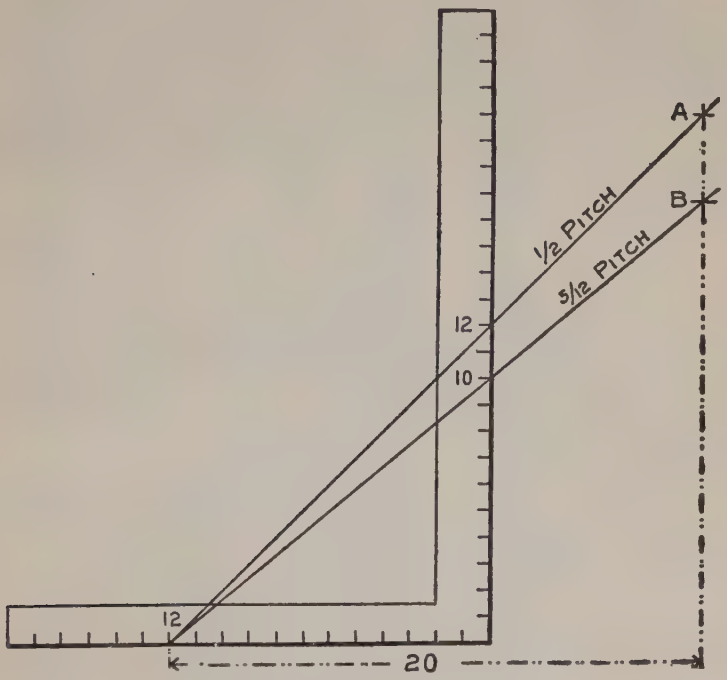

Valley Cuts of Plancier.

Question: Will you please give rule to get the valley cuts of the plancier and facia?

Answer: Just stop and think a minute and it will be seen that the cut of the plancier is identical with that for the sheathing board that rests just above. One fits to the angle of the underside of the valley while the other fits to the angle of the top side. The figures to use on the square

for the angle across the face of the board are the same as those for the side cut of the corresponding jack, but the cuts are reversed on the square, or in other words, say the tongue gives the cut across the face of the board while the blade gives it across the back of the jacks. Now, referring to the accompanying illustration, we will suppose the roof has a rise of 10 inches as shown on square No. 1. The length of the pitch is $15\frac{5}{8}$ and this taken on the blade and 12 on the tongue are the figures to use. The tongue giving the cut across the face of the board.

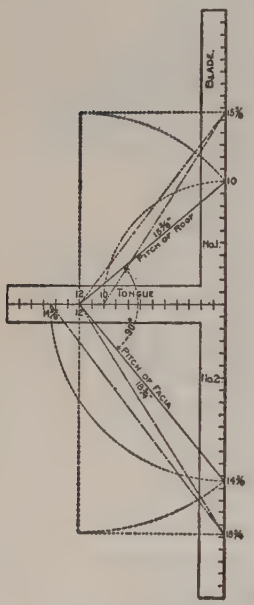

For the edge or miter, take 10 on the tongue and $15\frac{5}{8}$ on the blade and the tongue will give the cut. Thus, it will be seen that these figures are obtained from the triangle bounded by 12-10 and $15\frac{5}{8}$.

The dotted lines show the movements or the transferring of these parts on the square. The corresponding facia is simply the same as the sheathing boards for an inverted roof resting at right angles from the upper one (provided the ends of the common rafters are cut square), and in the accompanying illustration intersects $14\frac{3}{8}$, as shown on square No. 2. The operation is the

same as that shown on square No. 1. In other words, if $14\frac{3}{4}$ is used for the rise of the roof, then the figures shown on square No. 1 will give the cuts for the corresponding facia. When the rise is 12 inches or one-half pitch, then the figures on both squares are the same and 12 and 17 will give the facia and miter cuts for the roof boards, plancier, facia and the side cut of the jacks.

From this it will be seen that the cuts in question are the same as for hoppers of like pitch.

Exact Length of Cut of Valley.

Question: What is the proper way to get the exact length and cut of a valley in a roof built as follows: The main roof is one-half pitch with a side gable 18 feet wide with 15 inches rise to one-foot run?

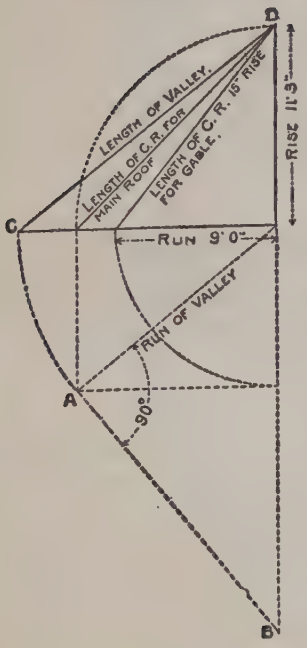

Answer: We will answer this question with a diagram supposed to be drawn to a scale of one inch to the foot. First lay off the run of the gable (9 feet) and an indefinite perpendicular line for the rise. Now, since the rise for one foot is 15 inches, for 9 feet it will be $15 \times 9 = 11'3''$ and represents the total rise of

the main roof and gable. Since the main roof is one-half pitch its run will equal the rise as shown by the dotted quarter circle.

Now lay off a parallelogram with side and end equal the run of the common rafters, and a diagonal line through this will equal the run of the valley, and this taken on a continued line of the run of the common rafter as at C, then C-D will equal the length of the valley.

For the side cut, draw a line at right angles from the run of the valley intersecting the plumb line of the rise, as at B. Then A-B taken on the tongue of the square and C-D on the blade will give the cut. The latter giving the cut.

If the two roofs were of the same pitch, the tangent line (A-B) would equal the run of the valley in length. For that reason many suppose it is the run that is used on one arm of the square instead of the tangent for obtaining the cut in question.

Regular and Irregular Rafters.

Here are two questions pertaining to the same subject. The former is regular and the latter irregular. We say irregular, because in the second example the run and projection are of different lengths. Hence the rafter in question is irregular just the same as the intersection of different pitched roofs. In other words, the rafter in question occupies the same position in the roof as the corresponding hip or valley, not a jack rafter, as mentioned in one of the questions.

Therefore, the figures to use on the steel square are just the same as for finding the lengths, plumb and side cuts for the corresponding hip. The former being regular, the side cuts are the

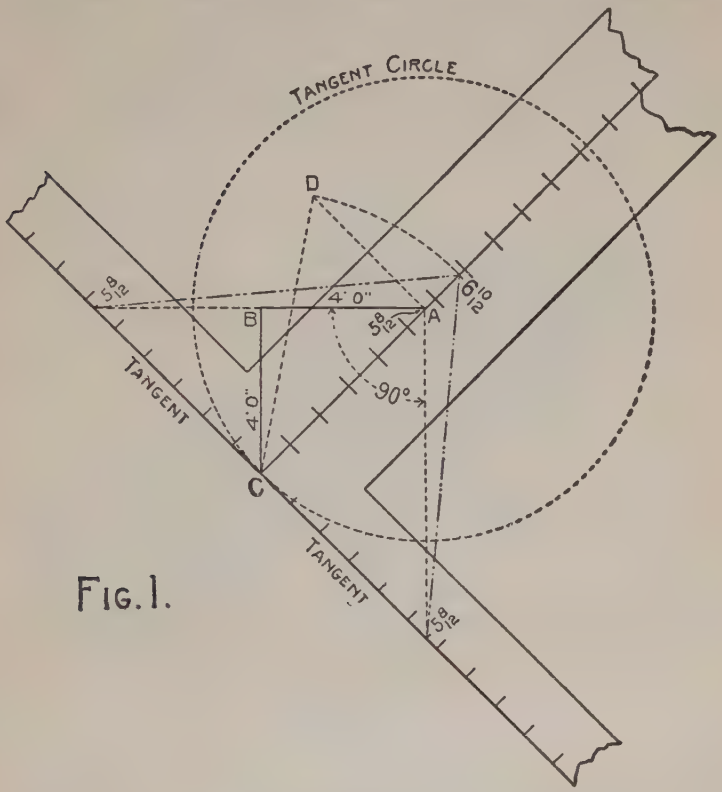

FIG. 1.

same, but in the irregular they are different, yet they are found by the same method, but it requires different figures on the steel square for obtaining the cuts.

Question: Please give the figures to use to

cut a hood rafter for a barn. The hood has an 8-foot span and extends out 4 feet. The rise is $11\frac{1}{2}$ inches. Also give the length of the rafter.

Question: We are building a barn 24 feet wide with $10\frac{1}{2}$-foot rise and wish to cut a pair of

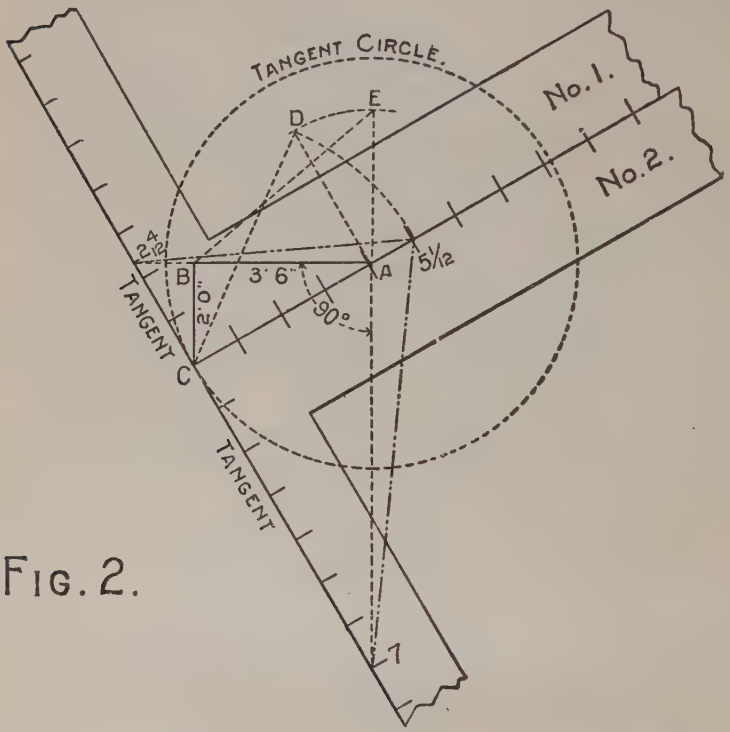

FIG. 2.

jacks to form hood over end of track. The hood to extend 2 feet out from end of barn and to cover 7-foot span at base of jacks. We want to know how to cut them. Please make your answer as simple as possible.

Answer: In Fig. 1 are shown the proportional

figures to use on the steel square for the regular or first question. The triangle bounded by A-B-C represents three measurements, as follows: A-B, run of the common rafter; B-C, projection of hood; C-A, the run of the rafter in question. From the latter, at A, erect the rise given the

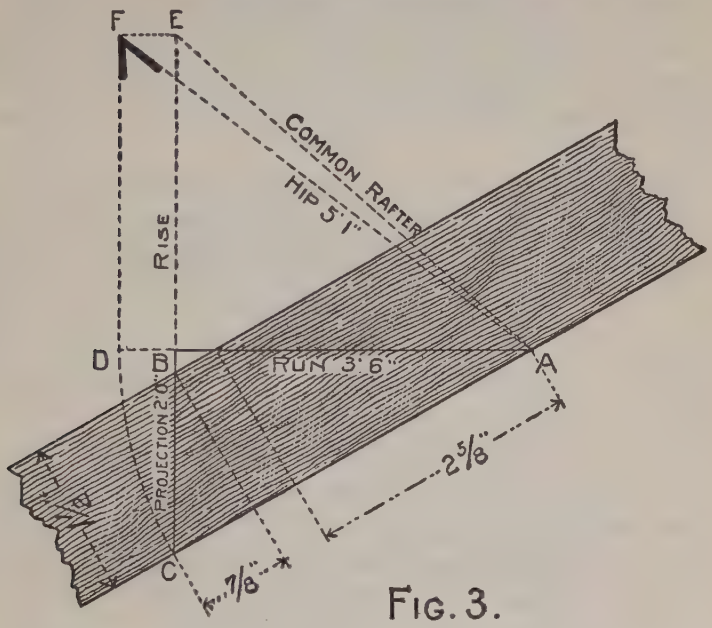

FIG. 3.

common rafter as at A-D and draw line C-D, which will represent the length of the rafter. The diagram can be drawn to any convenient scale. In this, we have used one inch to the foot. To this apply the steel squares as shown. Extend the line A-B till it intersects the tongue, and from A and at right angles from A-B draw a line till it intersects the tongue of the opposite square.

It will be seen that these lines in either case intersect the tongue and blade of the squares at like figures because the seat of the hip rests at an angle of 45 degrees from the common rafter and the ridge or projection, consequently the intersections on the steel squares are of like proportions. The figures on the tongue represent the length of the tangents—not that of the run of the hip, as is generally supposed. Having established the figures to use on the tongue for the

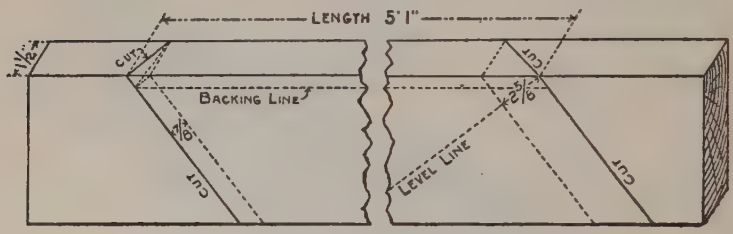

FIG. 4.

top, or more generally side cut of the hip, we will now take the length of the hip C-E on the blade (6 10-12 inches) and the tangent (5 8-12) on the tongue. The blade will give the side cut of the hip at either end across the top of the unbacked hip. The plumb cut, of course, being obtained from the run C-A and rise A-D of the hip. For a rafter of this kind, the backing should all be one way and may be found by taking the length of the hip (6 10-12 inches) on the blade and rise A-D (3 10-12 inches) on the tongue, and the latter will give the proper angle, or it may be found by setting off the full thickness of the seat cut line.

Now, we will take the second example as shown in Fig. 2 and proceed as in the above, but the tangents instead of being equal are found to be of different lengths. Consequently it will require the figures as shown on both squares, as follows:

Square No. 1 will give the cut across the back to fit against the common rafter, while square No. 2 will give the cut across the back at the upper end. The blade giving the cut in both cases.

These cuts may also be had by first backing the rafter and applying the steel square with the figures that give the side cut of the corresponding jack, as follows:

Length of projection C-B on tongue and length of common rafter B-E on the blade. The tongue will give the cut at the top and the blade at the bottom. Of course there are other ways of arriving at the same results, as by geometrical diagrams, but after all it requires the steel square to properly lay off the diagram. Then why not learn to use the square direct to the timber?

In Fig. 3 is shown a diagram of this kind. Taking the above problem for example, lay off the triangle bounded by A-B-C and across this lay off the full thickness of the rafter and square across the back from the intersection of the triangle lines as shown. The $\frac{7}{8}$-inch and $2\frac{5}{8}$-inch are the distances to set square back from the plumb cut lines to obtain the angle across the back. The plumb cut is found by erecting the rise as from

D on extended line B-A equal to B-E. Then F-A will represent the length of the rafter and the cut may be had by applying the steel square with the proportions A-D and D-F, or it may be had by applying a bevel at F, as shown.

In Fig. 4 is shown the lay out on the rafter, which, we trust, needs no further explanation. But, after all, there is nothing better for such work than a thorough knowledge of how to use the common steel square. There are a number of patented instruments now on the market for which are claimed the simplification of framing in general. Some even go so far as to claim superiority over the steel square. At best these instruments are only limited to the more common things in regular work and their scope is necessarily limited.

Constructing a Pentagon.

Question: What figures would you use on the square to form a pentagon? Also what ornamental designs can be formed therewith?

Answer: If we place the steel square on a board with the figures that give the miter for the pentagon, as shown in Fig. 1, and cut out that part covered by the blade and tongue, the two end pieces would form a miter with a right-angled corner, as shown in Fig. 2. If four blocks the shape of that cut from the board be placed together, as shown in Fig. 3, they will form a perfect square frame. This would occur regardless of any miter used on the square as far as this

figure is concerned, but if the figures on the square for any of the polygonal miters are used for cutting these triangular blocks, they will form

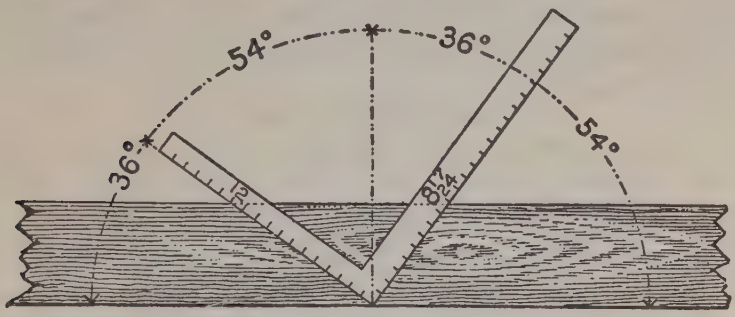

FIG. 1

when placed together, the figure that represents their miter, as shown in Fig. 4. If they are laid with their short and long cuts matching each

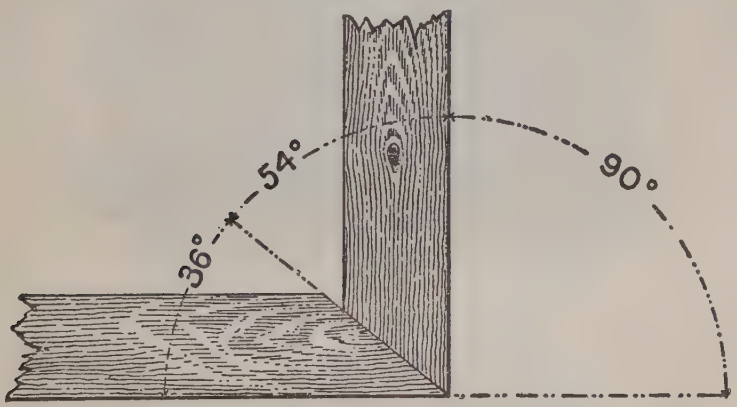

FIG. 2

other, and with points touching, as shown in Fig. 5, they will still tell the part, though cast aside, that they helped to make. They may be arranged

differently but the telltale remains of the part they once occupied.

A very ornamental diagram of the pentagon may be formed with the steel square alone, as shown in Fig. 6, by laying a square on a level

FIG. 3

surface and marking around the same, letting 12 on the tongue remain at the center and 8 17-24 be the intersecting point on the blades. After ten movements of the square has been completed, it will be seen that portion of the blade below 8 17-24

helps to form the sides of a true pentagon, and the intersecting lines from the blades form the five-pointed star. The dotted lines are thrown in to show the accuracy of the work. A very pretty diagram can also be made by reversing the figures

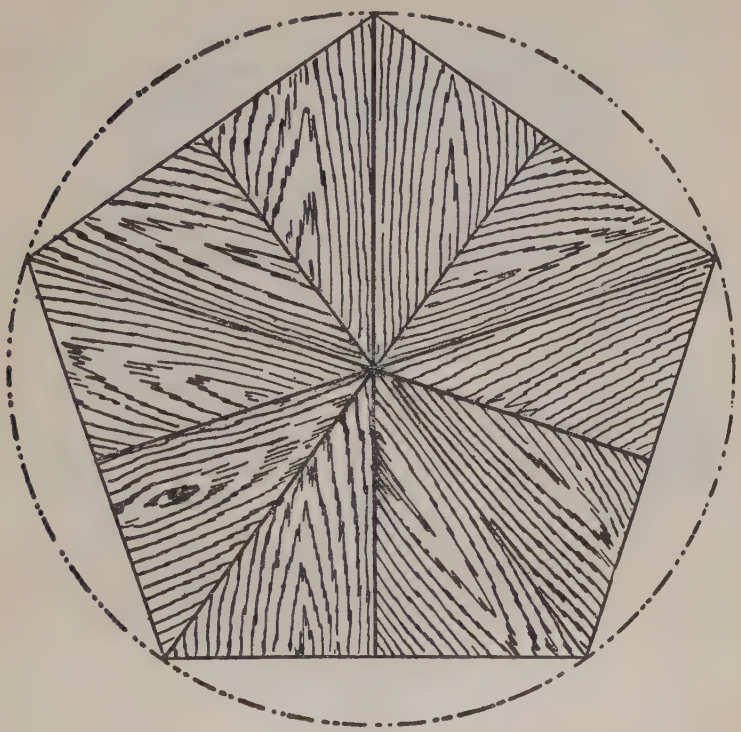

FIG. 4

on the steel square; in other words, let 12 on the blade be the center and 8 17-24 be the intersecting figures on the tongue, as shown in Fig. 7.

For the above illustrations we have taken the pentagon, but the rule is just as applicable to any

of the other polygons and, in fact, some of the others with more corners would make more attractive illustrations. From these it will be seen that the whole make-up of the designs is formed by triangles and their dimensions. Base, altitude

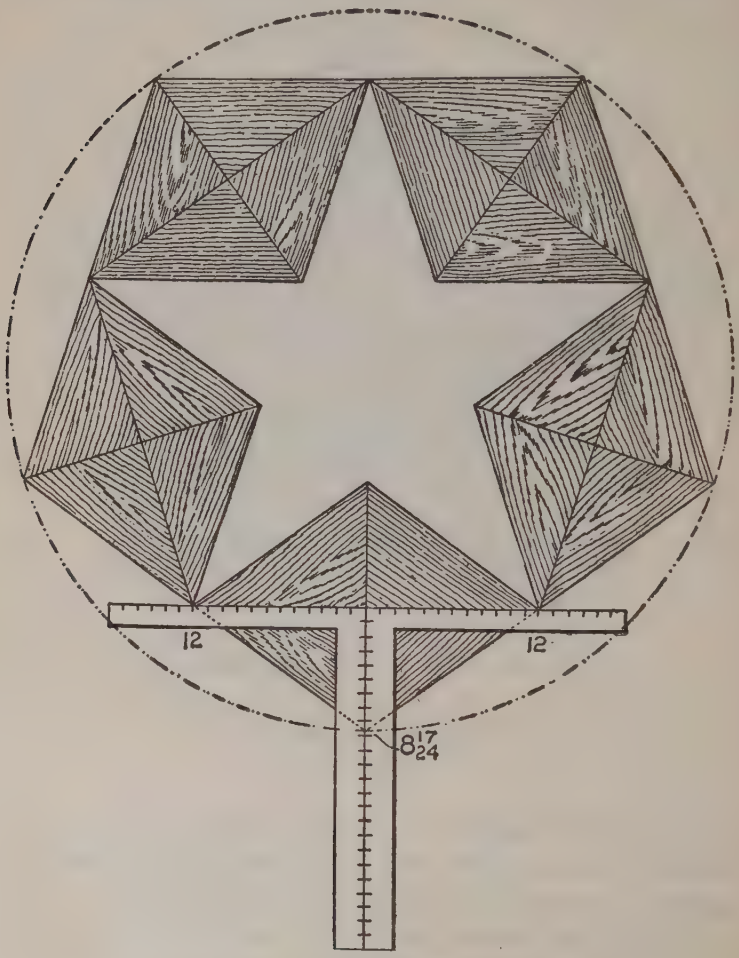

FIG. 5

and hypothenuse are the proportions taken on the steel square to obtain all of the angles, cuts and bevels required in framing roofs, hopper work, etc.

The reader will notice that in all of these illus-

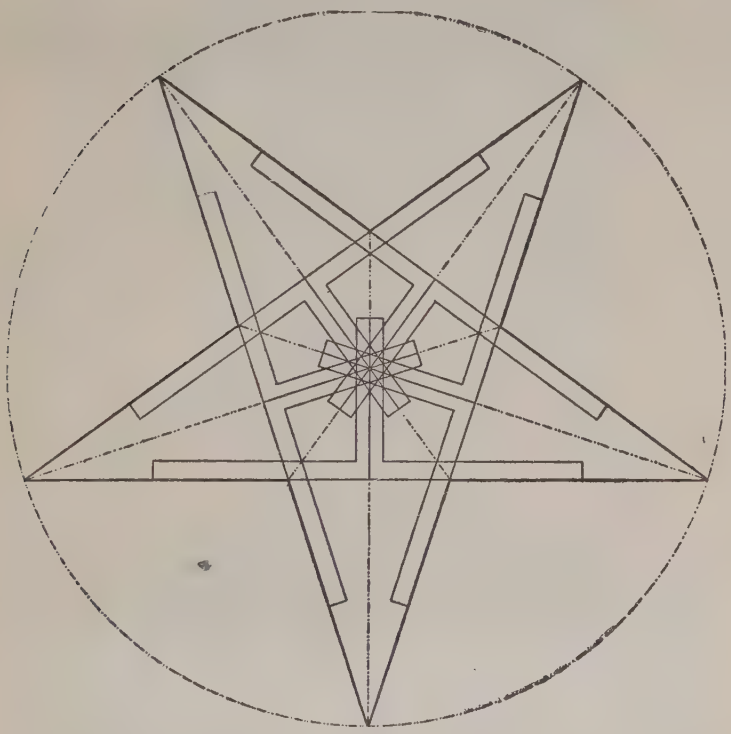

FIG. 6

trations in connection with the pentagon we have used but one set of figures on the square. Of course other figures can be used, but they must be to the proportions given in these illustrations.

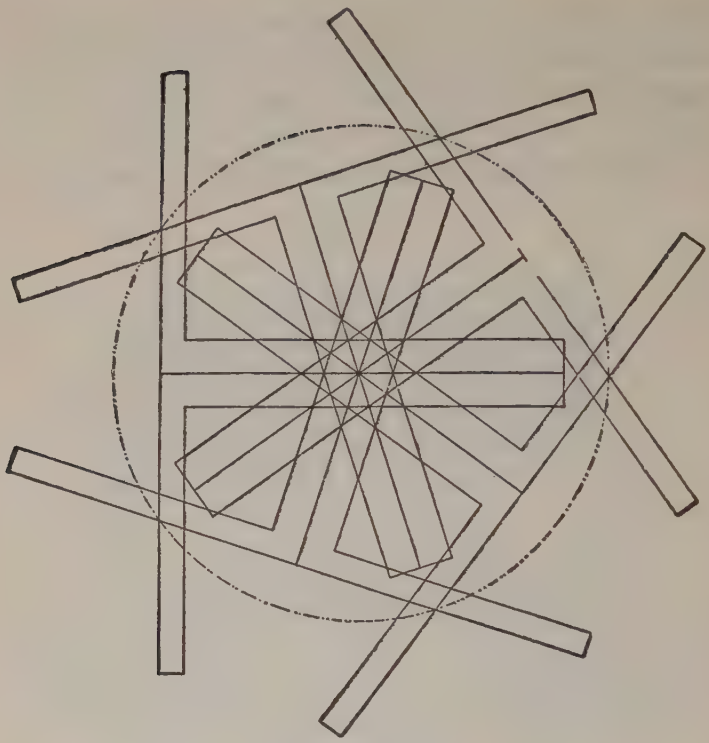

FIG. 7

Method of Constructing Trestles.

Question: Will you kindly show a simple method of constructing trestles?

Answer: The reader may think it is foolish to take up space telling about a saw horse that any boy can make, but my experience has been that if we pay attention to the little, simple things and fully understand them as we pass along, that we gradually observe and learn until the more difficult seem simple as we come in contact with

them. In fact, the mechanic that always pays attention to all little things never has anything too big for him to handle; but the mechanic that never considers small things stops completely when he comes in contact with something just a little difficult, and there he stands until the simple mechanic comes along and shows him what a simple little thing has stopped him.

While it is practically true that any one can

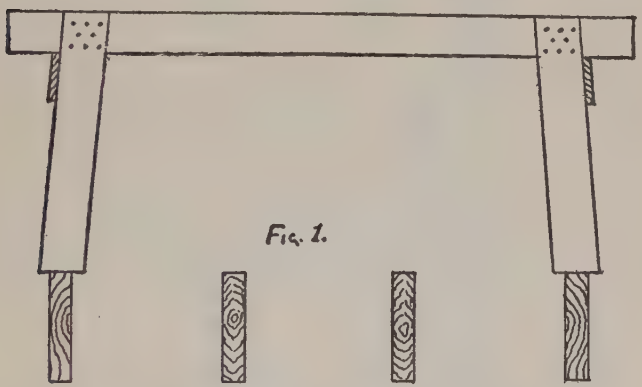

Fig. 1.

make a pair of trestles, yet it is indeed strange how few go at it with any mechanical knowledge of just what they are driving at, or just exactly what kind of a pair of trestles they will have when finished.

Fig. 1. A very good trestle for ordinary use can be made with a 2 by 4 about five feet long, with two legs nailed on each end just four feet from center to center, as hundreds of times it is convenient to put a trestle on uncovered joists.

Fig. 2. If the legs are to be spread at the

bottom to eighteen inches, place the two-foot square on 8 inches on the tongue, and mark there for the bottom cuts of legs, and end of blade for top cut. That gives cuts and length of legs if you

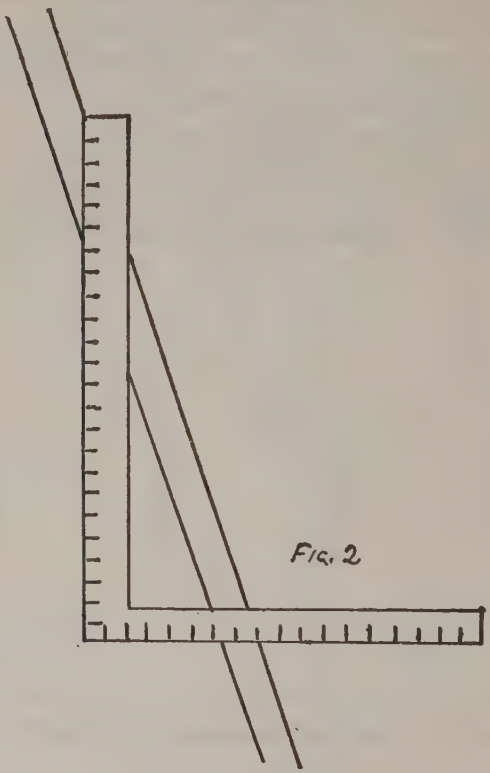

Fig. 2

wish them two feet high, which is a common height.

Fig. 3 shows end of trestle with a 1 by 4 nailed on and complete.

Fig. 4 shows one made with $\frac{7}{8}$ legs, with a 1 by 6 nailed on and a 2 by 6 laid flat, and with a 1 by 4

brace nailed on the bottom. This makes a very handy combination trestle, work bench and step-ladder.

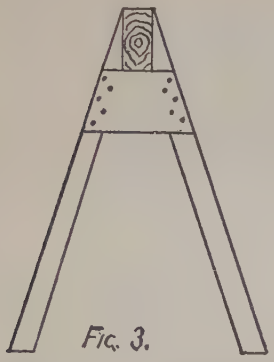

Fig. 3.

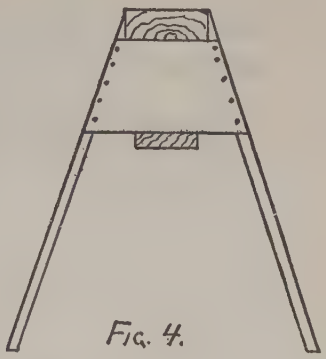

Fig. 4.

Fig. 5 is by far the best trestle I ever used for inside finishing, and is made entirely of $\frac{7}{8}$ pieces—scraps of flooring or anything can be used. The

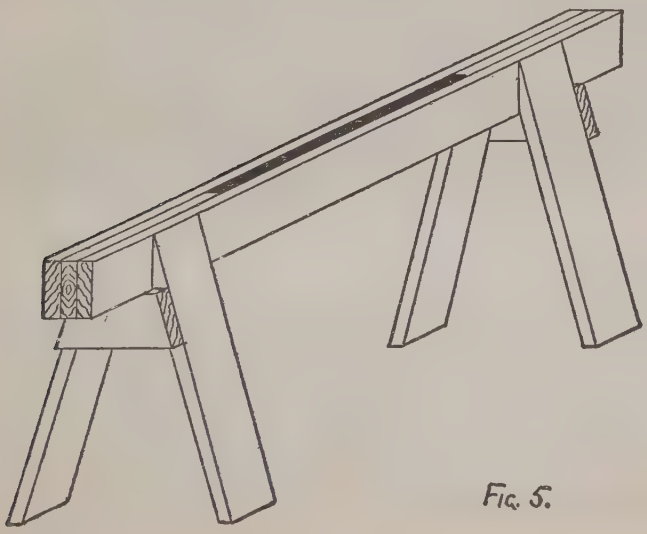

Fig. 5.

slot in the center makes the handiest kind of a vise to hold short pieces of base, etc., while sawing miters, and many other uses, especially handy many times as a tool rack to hold chisels, awls, etc. It makes a very neat, light and convenient all-around trestle for all kinds of light work.

Laying Out an Ordinary Stair.

Question: Kindly show me a simple and accurate manner of figuring treads and risers for floors of any height.

Answer: Stair work on even the simple kinds of stairs is considered by many builders the most difficult part of the work encountered in a building, but it is really not much harder to lay out a stair that it is to fit and hang a door. If one is familiar with the fundamental principles so as to go at it understandingly, a stair for almost any conditions can be quickly designed.

Numerous tables of treads and risers, giving the treads and risers for any floor height or the run of the stairs for a given number of risers, have been published, but all the information necessary can be found by the little rule given below for any particular condition as quickly as by the use of a table.

It has been worked out from theory and found by practical experience that in the easiest stair twice the risers, plus the tread in inches, should equal from 23 to 25 inches. If the ratio is varied much from this the stair becomes harder to climb. No matter how steep or how flat the stair, by

following this ratio it will always be the best stair for the place.

Someone will say, but you don't know what the risers or treads are or how many there are to be. That can be quickly found. We will take, first, the case where the run of the stairs is not fixed. If it is a rear stair we can use a riser of 8 or even 9 inches, and a front stair 6 to 7 inches. Divide the floor height by the riser and we have the number of risers. Now, from our rule we find that the tread equals 24 minus twice the riser, and as there are always one less tread than the number of risers, we have the run of the stairs.

Now, we will take the case where the floor height and run of the stairs are both fixed. Here we take the floor height in inches, double it and add the run in inches. Divide this by 24 and we have the number of treads. Add one to the number of treads and divide the floor height in inches by this number and we have the exact riser height. Divide the run in inches by the number of treads and we have the height of the tread.

The result is the easiest possible stair which will fit the fixed conditions.

To make the explanation clearer we will make a practical application of the rule.

The floor is 12 feet and the run is 16 feet. Twice 12 feet in inches equals 288 inches; 16 feet equals 192 inches, and the sum is 480 inches. Divide this by 24 and we get the number of treads 20 and 21 risers; 12 feet divided by 21 gives us a riser of $6\frac{7}{8}$ inches; 16 feet divided by 20 gives us

a tread of $9\frac{5}{8}$ inches. Twice $6\frac{7}{8}$ inches, plus $9\frac{5}{8}$ inches, equals $23\frac{3}{8}$ inches, which is as near as we can get without using smaller fractions and near enough for all practical purposes.

Of course it is understood that the riser height is from top to top of tread, and the tread length from face to face of the risers. In laying out the strings this must be taken into account. The

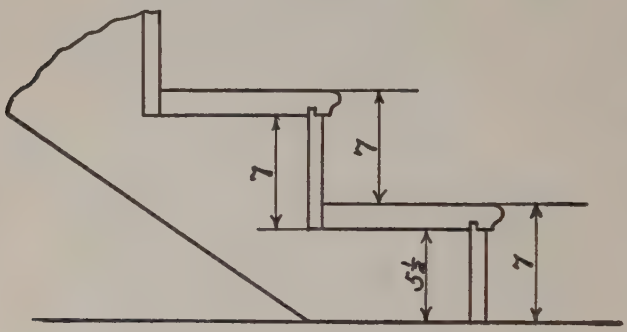

FIG. 1.

string is laid out the same as the rise and tread lengths, with the exception of the first riser, on which allowance must be made for the first tread. By referring to Fig. 1 this will be clearly understood. The foregoing has been with reference to straight run stairs, but a stair with landings or with winders can be treated in the same way. If the stair is one with landings but no winders it is simply a series of straight runs which can be laid out as given above. It must be remembered, however, that if the several runs are in one

continuous stair the risers and treads should be the same throughout, for any change in the treads or risers will be a stumbling block to every one who uses the stairs.

Winders are not desirable if they can be avoided,

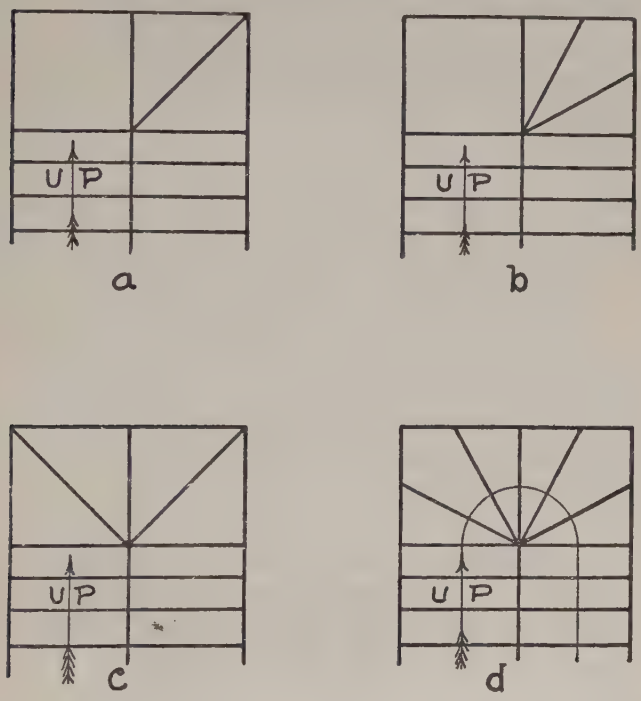

FIG. 2.

but if the space available for the stair has been reduced to a minimum to make room for other things it becomes necessary to make use of them in order to reach the desired height without making the stair too steep. If a case of that kind

comes up, first try it without the winders, and if it makes the stair too steep decide upon the number of more risers necessary to make the stair satisfactory. Where only one or two additional are required they are sometimes laid out in plan on one side only—see Fig. 2, (a) and (b)—making a kind of half-landing or resting place. In (b) one more riser is used. In (c) the same number of risers have been laid out in a symmetrical manner, making a more continuous stair of it. These winders will have the same riser height as the common risers, but of course the tread length which is on the curve, as in (d) Fig. 2, varies with the number of winders. This is not theoretically the correct way of planning winders, but for cheaper stairs it is the method used. When the stairs are elliptical or circular and of stone or iron the winder treads are worked out in the proper ratio to the riser.

Finding Correct Cuts for Hoppers.

Question: Will you give a method of finding the side, miter or butt cuts for hoppers?

Answer: The methods of finding the side, miter or butt cuts for hoppers and like class of splayed work seem almost endless, and all this is so confusing to the young joiner that his progress in this direction is usually slow, especially when he is shown one method for a square angle, another for an acute, and still another for an obtuse angle, when the work is to be mitered at the angles, and, perhaps, a separate method for

each of the angles when the work is to be butt jointed.

It is the purpose of this article to present to the reader ways and means of obtaining the correct cuts for this class of work, showing two simple methods, one for mitered angles and one for butt joint angles, and covering all classes of work, so long as the slant to the sides is uniform, whether it is a square, an acute, or an obtuse-angled corner. The careful student will readily see that this means triangular, square, pentagonal, hexagonal, heptagonal, octagonal, or any other "gonal" kind of splayed work, whether for hopper, spire, column or other purpose.

To make all plain, we will refer the reader to the drawing in which Fig. 1 teaches the whole art. The same reference letters are used in representing the same line in each of the angles for which the cuts are desired, so the directions will answer for any one. Just pick out your own angle, whether it be the square angle shown at (a), or the acute angle shown at (c), or the obtuse angle shown at (b). First, draw a plan of the angle as at A; these lines we will call the base lines. Parallel to these lines, at any convenient distance, the greater this distance the more accurate will the drawing be, draw other lines as shown which will form an angle, as at a, which will correspond to the angle A. Connect A-a and the miter on the plan is found, which would be the proper one to use if the edge of the side was beveled to lie in a plane with the plan, as in Fig. 2,

but if the miter across the square edge is desired, we would proceed as follows: From the base line on either side of the angle draw a line corresponding to the slant of the work, as e-f; from f, with a radius equal to the distance across to the base line, draw an arc intersecting e-f at i; and through i parallel to the base line, draw a line to point of

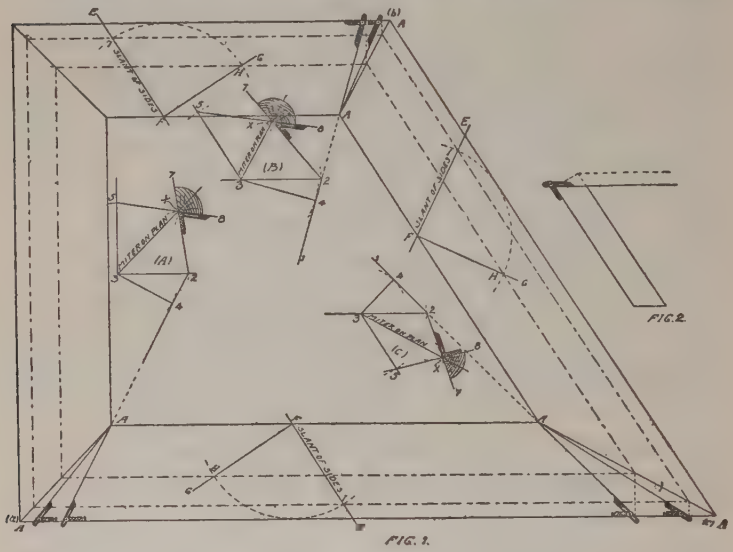

FIG. 1.

FIG. 2.

intersection with miter line, A-a, on plan; square over to the base line and connect to the interior angle a, and the miter is found, as shown by the bevel.

To find the bevel for the cut across the sides, draw from f, previously found, f-g at a right angle to e-f, and intersecting the arc i-h at h. Through h parallel to the base line draw a line to point of intersection with the miter A-a on the plan,

square over to the base line from this point, and connect with the interior angle a, and the angle formed by this line and the base line is correct for the bevel.

Let us now consider the scheme for developing the lines for a butt joint for the square corner, as at (a); or the obtuse corner, at (b); or the acute corner, at (c), shown on the interior of the diagram, in which the same reference figures refer to corresponding lines in the different diagrams, as before. First, we will draw a line 1-2 corresponding to the bevel cut across the sides, which will be the same as found before, the work having the same slant to the sides. From 2 draw 2-3 corresponding to the edge of the board or base line. At a right angle to the line 1-2 from any point draw 3-4, and from 3 draw 3-5, which, with 2-3, will form a plan of the angle for which the bevel is desired. Make 3-5 equal to 2-3, and from 2 and 5, with a radius equal to 4-3, strike arcs intersecting at x, and from 5 and 2, through x, draw 5-8 and 2-7; then the angle formed at 2-x-8 or 5-x-7 will be the angle for the bevel sought, and 7-x-8 will be the correct bevel for a corner strip to fit the angle formed by the sides.

These methods have been in use for years—long, long before I learned to saw to a line—but because of the simplicity and that the principle of either answers so well for all purposes of the problems involved in the case, I have deemed them of value to all workmen, especially the beginner.

Cutting Siding for a Gable.

How many of you ever tried cutting the siding for a gable on the ground, instead of on the tresses? The idea is original as far as we know, as we have never seen anyone else use it. It is much easier, quicker, more saving of siding and much more satisfactory every way than to cut it out on the scaffold. As soon as you are well into the gable fit in a piece to run clear across the gable if possible. Now be sure and cut this to fit neatly, as it is your pattern. Now take this to your tresses and with your working gauge lay off what you want to show to the weather. Gauge all your timber for the gable this way. Now lay the piece already cut on the next piece to be cut, with the gauge line at the bottom of the piece to be cut just as it will appear when put up, and mark the length. Now lay your pattern on top of the piece to be cut and mark your angles same as pattern. Don't use your bevel square, for if the siding is not exactly straight your bevels will be wrong. Now proceed in like manner, until all are cut; then all you need to take to the scaffold is your hammer and block-plane, and you will not need your block-plane if you have been careful to cut the angles like the pattern, and you have no nails to set to hold your siding while you mark it.

How to Frame a Roof.

Question: I am sending you a plan of a two-story house. Will you give me a plan of a hip

roof for this building? The cornice will project 1 foot 6 inches from the plate. Give lengths of the hip, valley and common rafter.

Answer: As the pitch desired is not stated, we will assume it is a 9-inch rise to the foot. The accompanying plan gives the length of the

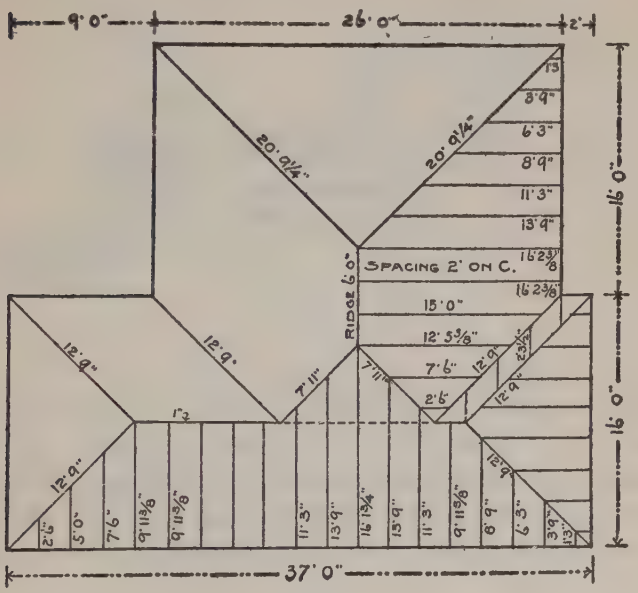

various rafters. Care should be taken to see that the dimensions of the building are correct and the angles perfectly square. The net lengths of the rafters are given so that it is not necessary to make deductions from the ridge piece. The measurement for the jacks is given for the long side.

Intersecting Gable with the Eave.

Question: Please give a rule for cutting and adjusting rafters when gable and eave cornice intersect in order to have the facias come same width.

Answer: Frame the rafters and valley just

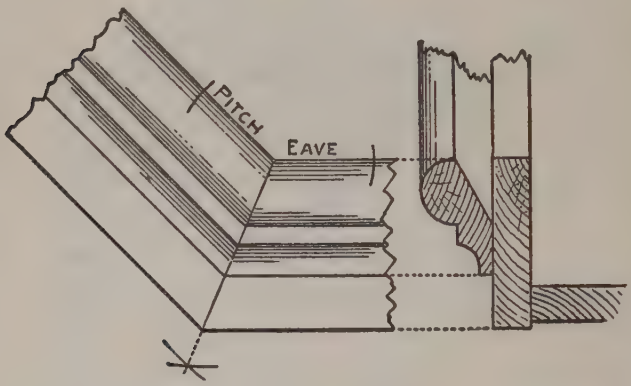

the same as for an internal angle. In cases of this kind, the plancier should be level with plumb facia. Then the miter would stand at the halfway point between the pitch and the level line of the eave, as shown in the illustration. The different pieces will number and be of the same width.

Finding Angles, Cuts and Bevels for Polygonal Sided Buildings.

Question: Kindly illustrate a method of obtaining the angles, cuts and bevels for polygonal buildings, on the steel square.

Answer: In Fig. 1 we show how the figures are obtained on the steel square for the side cuts

of the hip, but in this we will only show those most commonly used, namely, the square, hexagon and octagon. The others are omitted to avoid complication of the many lines that would be required in the illustration. Even in this not all of the movements or lines are shown, except for the square; but the reader must bear in mind what

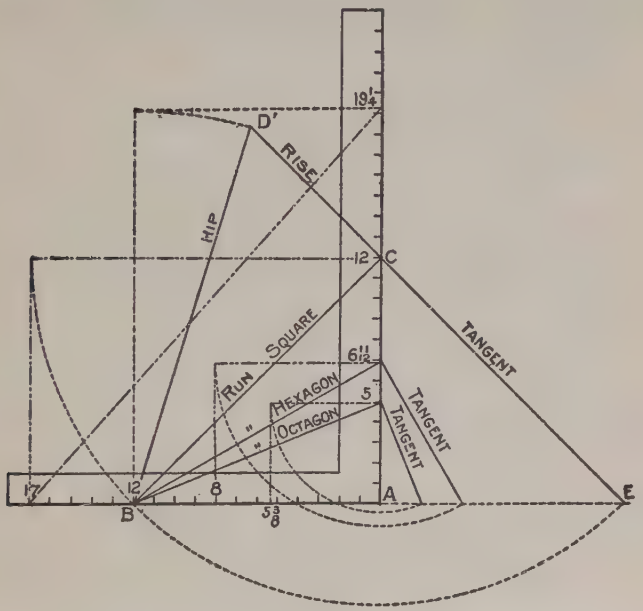

FIG. 1

is said of one polygon is true of all, no matter how many sides they may contain, provided they have sides of equal lengths and the roof lines radiate to the center. In other words, a building may have true polygonal corners, yet the roof may be irregular from the fact that part of the number of sides may be of a different length. When this

is the case, the polygon is irregular and the illustrations given do not apply here, though the figures to use on the steel square are determined from the same standard of proportion, but the hips being of different lengths, the measurements necessarily partake of both, and consequently it requires a different set of figures on the steel square for the different sides. Therefore, the following pertains only to the regular pitched roofs.

In this figure the starting point is at 12 on the tongue, from which lines are shown to the respective tangents on the blade. These lines represent the run of the hip as compared for a one foot run of the common rafter. The figures shown on the blade represent the tangents for the corresponding run of the common rafter. To find the same for the hip, it is only necessary to run from these figures, square out from the run lines, intersecting a continued line of the run of the common rafter, as at E on line B-A, as shown from the square cornered building. The length of these lines represent the tangents, and when transferred to the tongue, as shown by the dotted lines, represent the figures to use on that member for the side cut of the hip, regardless of the pitch given the roof. But not so with those used on the blade, for the plumb cut, because they are regulated by the pitch given the roof. In this we have taken the nine-inch rise to the foot, and as will be seen, is simply a continued line of the tangent as C-D′, then the line B-D′ represents the length of the hip, and this transferred to the blade rep-

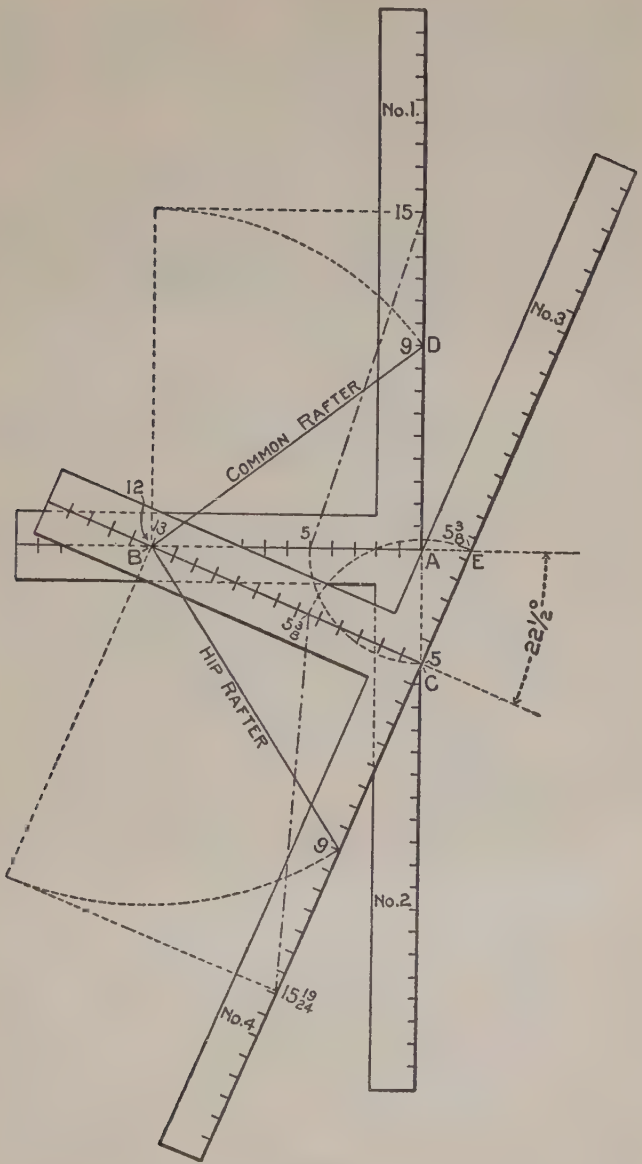
No.1.
15
9
D
COMMON RAFTER
12
13
5
B
A
E
5 3/8
No.3
22½°
5 3/8
5
C
HIP RAFTER
9
No.2
15 19/24
No.4

FIG. 2

resents the figures to use on that member. Then 17 on the tongue and $19\frac{1}{4}$ on the blade will give the side cuts across the top of the unbacked hip. The blade giving the cut.

Note.—The length of the tangent for the square-cornered building is equal to 17 inches, which is also the length of the corresponding run, as shown by the dotted circular line. For this reason it is generally supposed that 17 is used on the tongue because it is equal the run. This is very misleading, as it does not apply to any of the other polygons, as will be seen in the case of the hexagon and octagon, which are shown to be 5 and $5\frac{3}{8}$ respectively.

Proceed in like manner to find the figures to use on the blade for the hexagon and octagon.

The octagon being more generally used than any of the other polygons, we will now take it up separately, showing the different figures to use on the steel square; but in this the angles are shown on separate squares, as will be seen in Fig. 2, as follows:

12 and 9 on No. 1 give the seat and plumb cuts of the common rafter. The squares No. 2 and No. 3 are used to form the plan, as bounded by A, B and C. The intersection of the heel No. 3 being at 4.97 on the blade of No. 2, which is as near 5 inches as can be worked to, and is therefore near enough for practical purposes, and with the tongue intersecting 12 on the tongue of No. 1 forms the plan, as above described, and happens to be at 13 on No. 3, and represents the run of

the hip. To this the square No. 4 is applied, and on the blade the rise is taken to correspond with

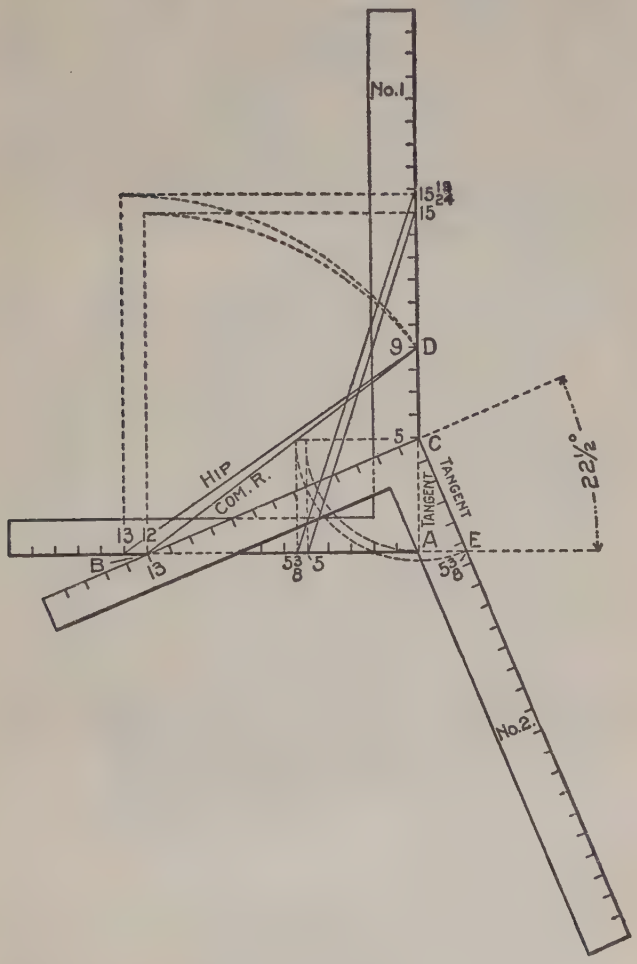

FIG. 3

that shown on No. 1. Then 13 and 9 will give the seat and plumb cuts of the octagon hip. The tangent of the common rafter is equal to 5 inches,

as A-C on No. 2. This transferred to No. 1, and the length of the common rafter transferred to the blade, will give the side cut of the octagon jack. The blade giving the cut. The tangent for the hip is equal to $5\frac{3}{8}$ inches, as shown at C-E on square No. 3, and this transferred to the tongue of square No. 4 and the length of the hip transferred to the blade will give the side cut across the unbacked hip.

Perhaps some may think that we use too many squares to illustrate the different angles. Very well, then we will try it with only two squares, as shown in Fig. 3. This is cutting the number down to one-half. Taking the same example as in the preceding figure all of the measurements are shown on the two squares. Like letters are used to represent the plan, and the description given in the former applies to this illustration. The measurements shown on No. 2 are transferred to No. 1, and are the same as given on the squares in the preceding illustration. Yet we fancy we hear some one say, "Why use two squares? Why not show all of these cuts on one square?" Very well, we will try it again. This time we will not only show the figures to use to obtain the cuts, but will show why they are used.

In Fig. 4 is shown a semicircle divided into the degree divisions, however, only one-fourth of the divisions, or the space covered by 45 degrees, are required for any of the polygonal angled corners above four, as will be seen later on.

In the illustration 12 on the blade is resting

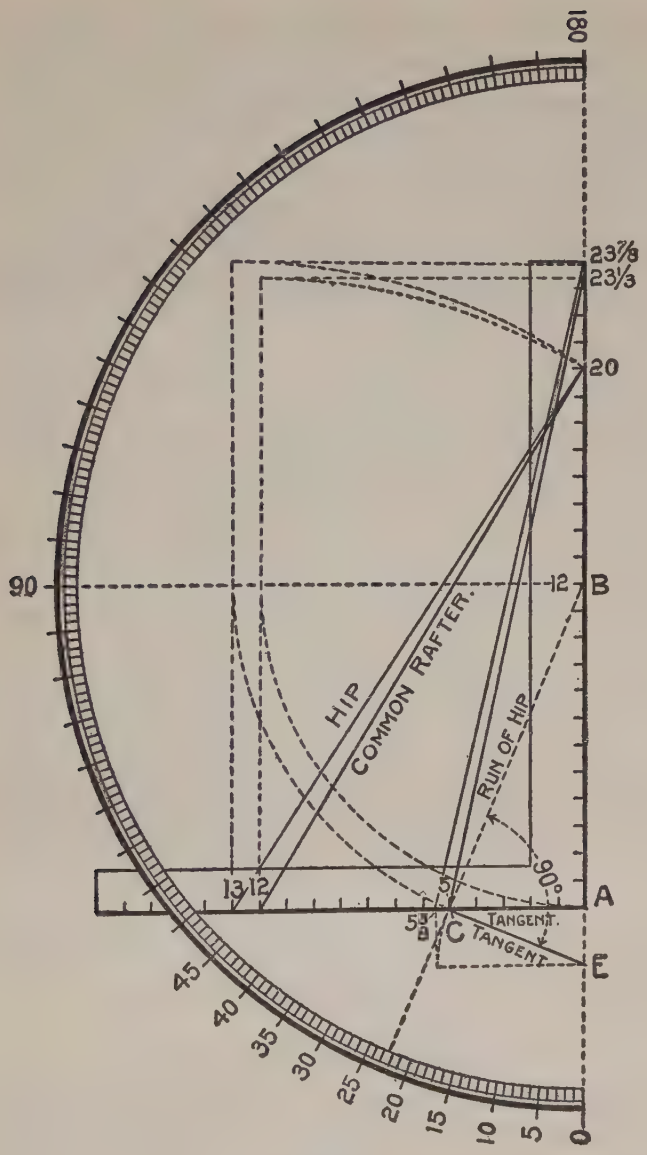
180
23⅞
23⅓
20
90
12
B
HIP
COMMON RAFTER.
RUN OF HIP
13 12
5
90°
A
5⅜
C
TANGENT.
TANGENT
E
45
40
35
30
25
20
15
10
5
0

FIG. 4

at the center of the circle and with the edge of the blade in line with the 180 degrees, as shown. Now, since the octagon has eight sides, we divide 180 by 8 and we find the quotient to be $22\frac{1}{2}$, which represents the angle in degrees of the run of the hip from that of the common rafter, and by drawing a line from 12 to the $22\frac{1}{2}$ division on the circle it will be seen that the line will pass at practically 5 inches on the tongue. From this point back to 12 represents the length of the run of the hip, while that from the heel to 12 represents the same for that of the common rafter. These lengths transferred to the tongue are found to be 13 and 12 respectively, and are the points to use on that member for the seat cuts. (Bear in mind that these figures are fixed points and remain so, regardless of the pitch given the roof.) Consequently these figures also represent the starting point for the pitch of these rafters, which we will assume to be a 20-inch rise, or 5-6 pitch. Lines then from 12 and 13 to 20 represent their slope in the roof, and their lengths transferred to the blade are shown to be 23 1-3 and $23\frac{7}{8}$ respectively. Here are all of the figures given on the square for the cuts as described in the previous figures, except in this, the pitch has been changed but the operation remains the same.

Constructing an Ordinary Stair.

Question: How would you build a stairway having a stretch-out stringer at the start and a quadrant between two flights?

Answer: In Fig. 1 is exhibited a plan of a stairway which represents a class that may be seen in any city and almost any village all over the country, yet few are the number of even

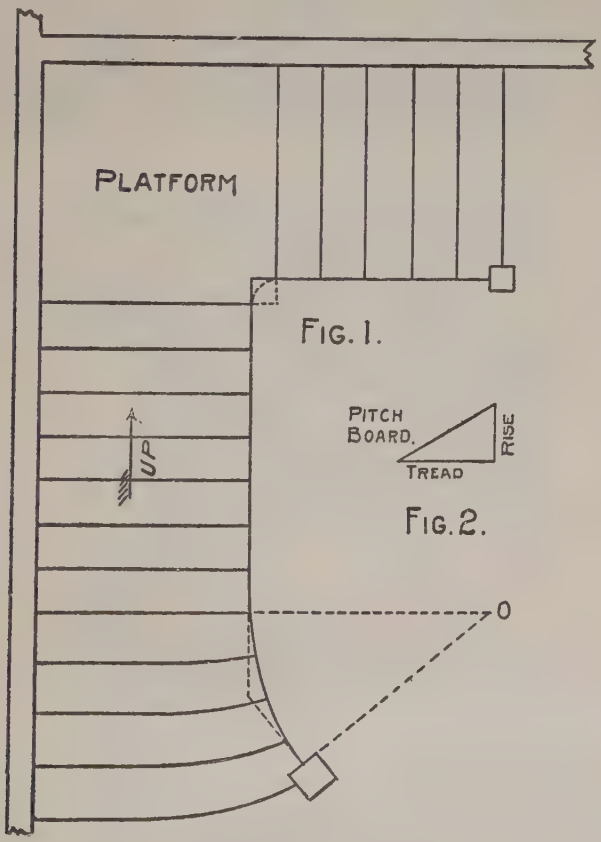

FIG. 1.

FIG. 2.

those carpenters reputed to be first-class mechanics that are capable of executing a job like this to their own and their employers' satisfaction.

In this article we propose to explain as lucidly

as the nature of such construction will admit, the laying out of all the details from the beginning to the end; so that any carpenter of ordinary intelligence may be able to go ahead with confidence of a successful issue.

The first requisite will be the pitch board which is shown in Fig. 2 to be a right angle triangle; the base representing the exact dimension

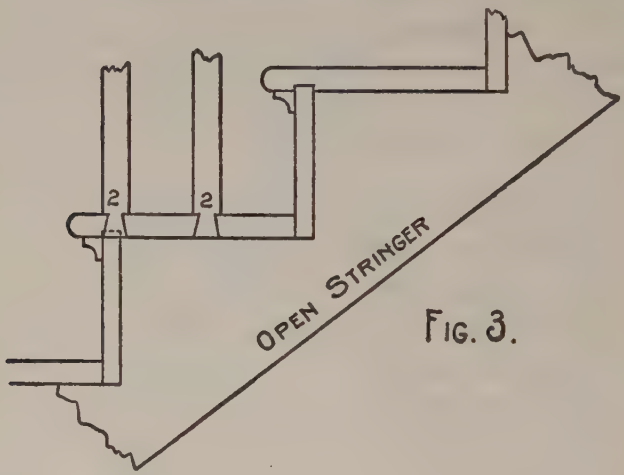

Fig. 3.

of the tread, and the altitude or height the exact dimension of the riser. It is generally made out of a piece of one-inch pine board, and too much care cannot be taken to secure the exact dimensions for the treads and risers; which depends upon the run and rise of the stairway.

What is meant by the rise is the distance from floor to floor. In this instance it is 10 feet 6 inches, or 126 inches. By dividing 126 inches by 18, we will obtain a quotient of 7 inches, which is the

exact dimension of each riser and in the complete structure we will have 18 of them. In ordinary stairways a 7-inch riser may be considered a very satisfactory limit to guarantee an easy stepping in ascending and descending.

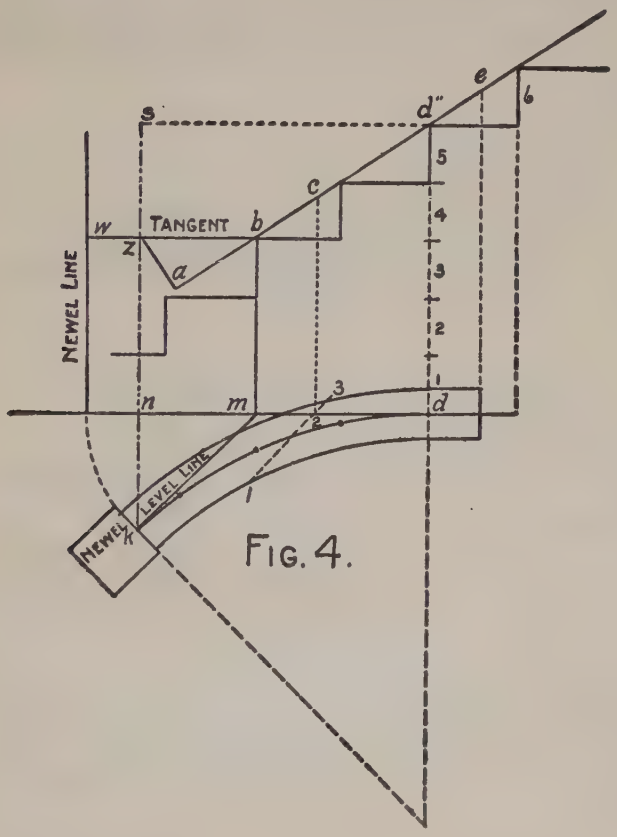

FIG. 4.

A proportional tread for a riser 7 inches wide may be found by dividing the number 66 by 7,

which equals 9 3-7 inches, which is the best proportional width of tread for a 7-inch riser.

With these dimensions for tread and riser, we will now cut out the pitch-board off a piece of an inch board; and mark 18 on the edge representing the risers, and 17 on the edge representing the tread.

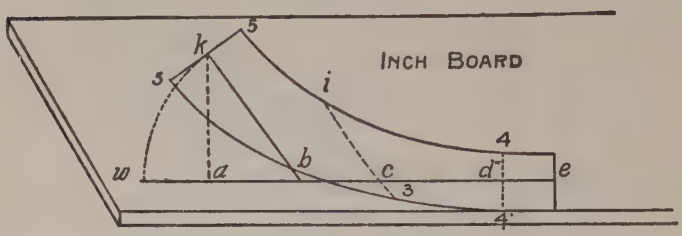

FIG. 5.

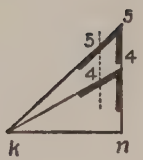

FIG. 6.

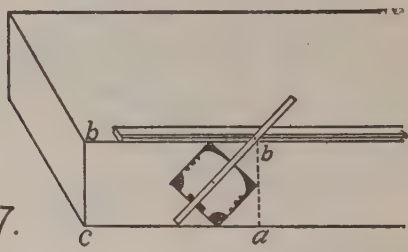

FIG. 7.

This will help memorizing the number of treads and risers required which, in course of construction, will be found of some advantage as it will minimize the danger of cutting the stringers too short.

With the pitch-board as a template the next process will to be mark the housings, or grooves, on the wall stringer and also on the front stringer

which, generally in stairways of this class, is cut out instead of being grooved.

In workshop parlance, the grooved stringer is called the "closed stringer," and the cut stringer is known as the "open stringer." The constructive principle of the open stringer is considered superrior to that of the closed stringer in stairways having continuous rails, where the winding wreaths

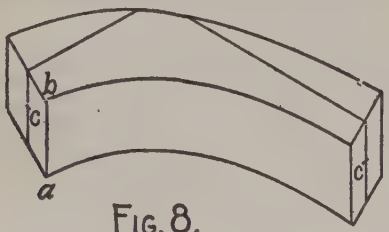

FIG. 8.

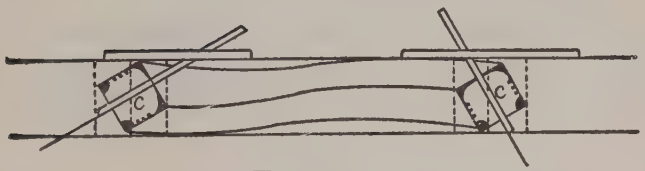

FIG. 9.

take the place of newels, causing the rail to depend absolutely for its stability on the strength that may be secured by the best means available of fastening the balusters to the rail and stringers.

In open stringers the balusters are always dovetailed to the end of the treads, as shown at 2 and 2 in Fig. 3, a method of construction if executed with care and when put together with good glue, and a nail or two, will hold the rail as fast as if held between newels; while with closed

stringers there is no way of execution other than nailing the bottom of the balusters to the top edge of stringer, a method, however well it may be done, will never accomplish the purpose of securing a stable and rigid rail.

The stretch-out portion of the stringer as shown in Fig. 1, is described from the center; and the curve is made to continue four steps; equally divided; so as to obtain the same pitch for the wreath as that of the straight rail, which is an arrangement that should always be adhered to, as it gives the finished rail a more pleasing appearance, and saves a great deal of extra labor in the manipulation of the wreath.

An elevation of these steps above the plan of the curved rail is shown in Fig. 4, where the pitch line of the straight rail is shown continued to point b over two of them; and from b a level tangent line is shown extending to intersect a perpendicular line representing the side of the newel post at w.

From k in the plan another perpendicular line is drawn to 1s, intersecting the line bw in z; and from z a line is drawn to a square to the pitch line a, b, c, d, e.

In the plan is shown a line 1-2-3 drawn parallel to the plan level tangent km; and from 2 a perpendicular line is drawn to cut the pitch line in c.

Now we are ready to draw the face mold, which is shown in Fig. 5. A piece of an inch board is procured large enough to contain the mold;

one edge of it is planed straight, and a line gauged from this edge at a distance a little more than one-half the width of the plain rail.

To this line is transferred the points on the pitch line in Fig. 4, as shown at a, b, c, d, e. The point w indicates the length from b equal to the length b w, which is the level tangent shown in

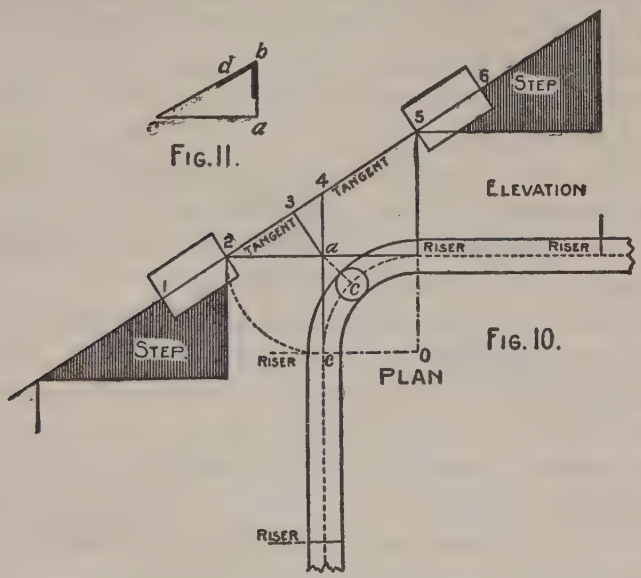

Fig. 4. Upon b erect the perpendicular line b k; place leg of the compasses in b; extend the other to w; turn over to k; and connect k b; which will be the level tangent as it is required on the face mold.

Make the joint at k square to this tangent and the joint at e square to the line b, c, d, e, which is the other tangent required on the face mold. Now

draw the line 1, c, 3 parallel to the tangent b, k; and make it equal to the line 1, 2, 3 shown in the plan Fig. 4.

In Fig. 6 is shown two levels that are required; to twist the wreath, one for each end, and one forward as follows:

Make k n equal to k n in Fig. 4; n 4 equal to z a Fig. 4; connect 4 k; the level is at 4, and is to be applied to the end e of the wreath. The distance 4-4 is to be applied on each side of d″ on the mold, as shown in Fig. 5, which determines its width at this end.

Again in Fig. 6 make n 5 equal to z s in Fig. 4, and connect 5 k, the bevel is shown at 5.

The distance 5, 5, taken from this bevel and placed on each side of k on the mold in Fig. 5, will determine the width of the mold at this end; and by bending a lath to touch points 5, 1, 4, the inside curve of the mold may be described; so also by bending a lath to touch points 5, 3, 4, the inside curve is described; thus completing the form of the face mold.

We will now need to know what thickness of plank will be required for the wreath.

In Fig. 7 is shown how this may be found.

Where there are two bevels as in the case under consideration, select the largest of the two; and as shown in Fig. 7, draw a square section of the rail parallel to the blade; the distance a b, as shown in this figure, indicates the thickness of plank required. Now place the face mold on a piece of plank of such thickness, and cut out the

form shown in Fig. 8, square to the face of plank, and cut the joints also square to the face and square to the tangents. Find the center of each joint, as at c and c, and place the bevels to cut the centers, as shown at c and c in Fig. 9, which illustrates the wreath as it will appear after it is squared ready for the molding.

In Fig. 10 is exhibited the plan and elevation of the quadrant shown in Fig. 1, at the junction of the two flights adjacent to the platform. There

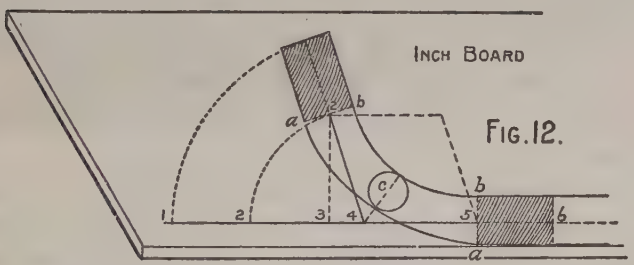

Fig. 12.

is nothing in this figure that needs explanation, except the line 3 a, which is drawn square to the pitch line of the rail from a. The pitch line of the two tangents is shown to align with the pitch of rail; as from 2 to 5.

One bevel only will be required for this wreath because the tangents are equally inclined and it is to be applied to each end owing to both being inclined. If one was level, the bevel would be applied only to one end. This applies to cases where the plan tangents stand at right angles to one another as in this instance.

The bevel is found as shown in Fig. 11 where c a equals the length of the plan tangent c a; and a b equals the line 3 a, which as already stated is made square to the pitch line of the tangents.

The face mold is exhibited in Fig. 12 and is drawn precisely as the face mold for the stretch-out wreath, shown in Fig. 5, was drawn.

In Fig. 12 the points 1, 2, 3, 4, 5, 6 are transferred from the pitch line in Fig. 10. On 3 a perpendicular line 3, 2″ is drawn; then one leg of the compasses is fixed in 4, the other extended to 2 and turned over to 2″. By connecting 2″ to 4 we fix the position of the tangent 2″ 4 as it is required on the face mold; the other tangent being 4, 5. The joints are made square to these tangents, respectively.

The shaded portions shown at each end are known as the "shanks," being, as they are, outside the curve of the mold, they do not properly belong to the wreath.

Fig. 13 exhibits a plan of the cylinder where it is shown to be constructed of three pieces jointed, screwed and glued together, the inside being worked to the curve of the well. It is connected to the stringers as shown by being notched and screwed.

In Fig. 14 a method is shown to draw the "gooseneck" adjacent to the landing newel so that the "knee" will aline with the landing rail.

The bottom of the rail is shown resting on the nosing of the steps, and continued to 2 the center of the newel.

It is desired to have the landing rail at a height of 2 feet 8 inches from the floor to the under side of the rail, we will therefore place the landing rail, as shown, 6 inches above the floor line. By this arrangement it is evident that when the flight rail is raised to its position, 2 feet 2 inches above the nosing line, the landing rail will then be 2 feet 8 inches above the floor line. Con-

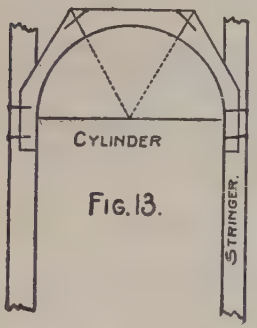

FIG. 13.

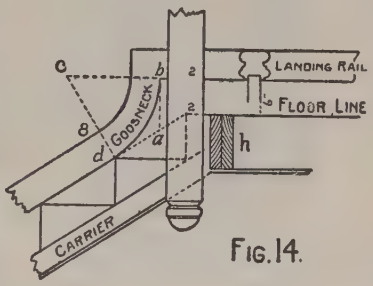

FIG. 14.

tinue the bottom of the landing rail to c; from b drop a line to a; make a d equal b a; take c from a center; c d for radius and describe the bottom curve; again take c for center c 8 for radius, and describe the upper curve. In this figure is shown a carrier under the stairway extending to the trimmer h; care should be taken to always fix the trimmer so as to be of use to support the end of the carrier.

How Wide Should be the Soffit?

I am looking for some information and have taken the liberty to ask you. Should the capital project outside of soffit? I claim, as long as the

rail is centered, it does not matter. I have built my soffit so that the forms of the capital do not project beyond the face of the soffit. Would you think it absolutely wrong?

Answer: Yes, it is wrong. According to the architectural orders, established by the Greeks

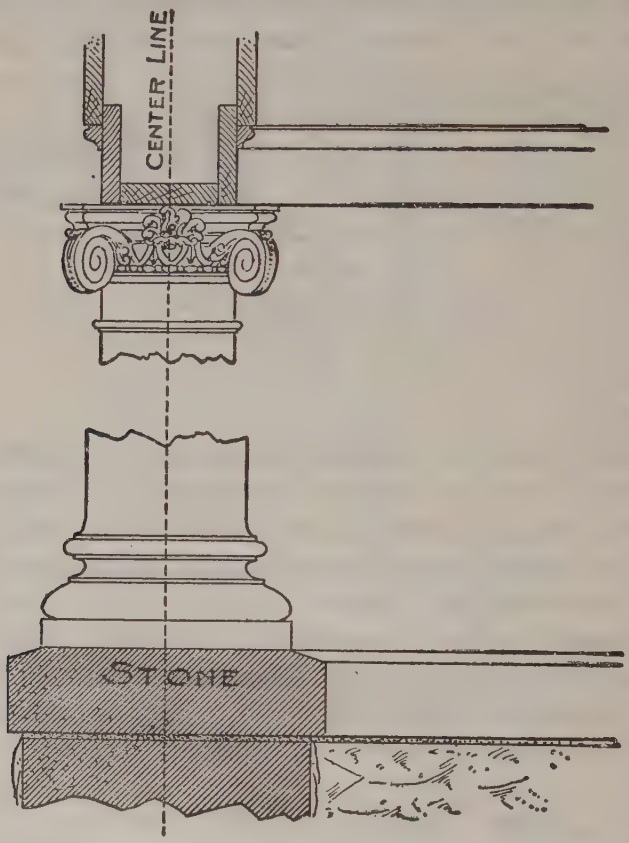

and Romans centuries ago, and upon which no one has been able to set up any better models, the soffit, at its narrowest part, should equal the

diameter of the neck of the column, as shown in the accompanying illustration, which shows that the soffit should be centered over the railing or coping. This is an error that occurs too frequently and sadly to the architectural effect of the house. The builder should know the size of the column that he expects to use, the difference in the diameters at each end, and frame his work accordingly. There is an established proportion based upon the diameter of the column running through all of the different parts, even to that of the main cornice and other parts of the house itself, and for the best effect should be rigidly followed.

Making Show Window Sash.

Question: Please tell me how to put plate glass in store windows? What should be put under the lower edge of the glass where it rests on the window sill? How should it be fastened at the bottom inside and out, and should pieces of lead or rubber be put under the glass? Should the moulding be put on the inside with nothing on the outside, leaving the lower edge of glass bare and showing the lead or rubber?

Answer: There are a number of ways of constructing store windows, and it is hard to say which is the better way. Cork or rubber is quite often used to put under the glass. Some use soft pine. Fig. 1 shows a form that the writer has used in his work, which has given very general satisfaction. In the better class of work the sill is covered with copper, letting the same extend back

far enough to form a drain on the inside. Three-inch copper dentils are soldered on the outside about six or eight inches apart, and the bearings

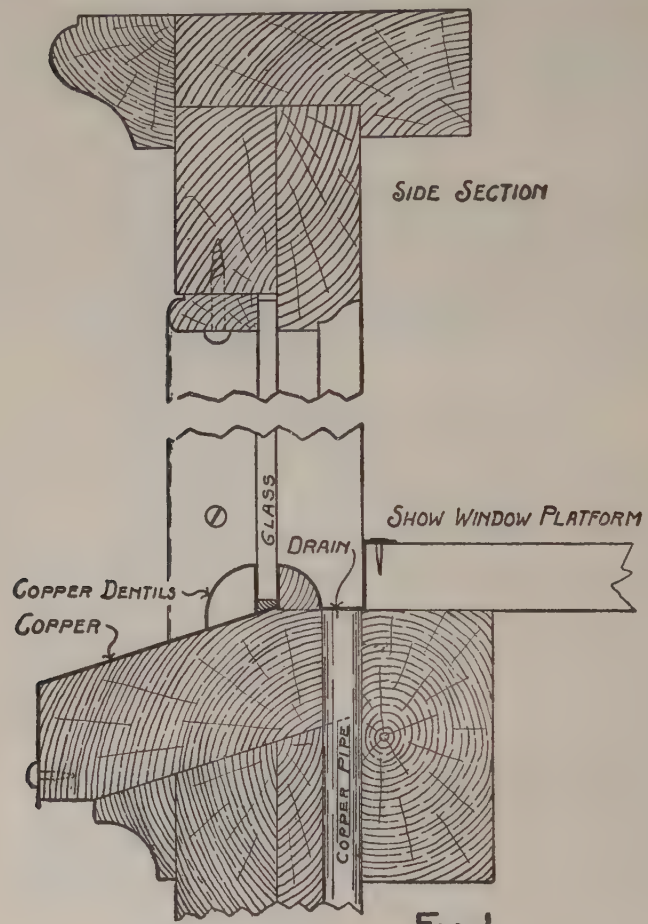

FIG. 1.

for the glass are placed back of the dentils, but none should be placed at or near the corners, as the weight will be liable to cause the glass to crack.

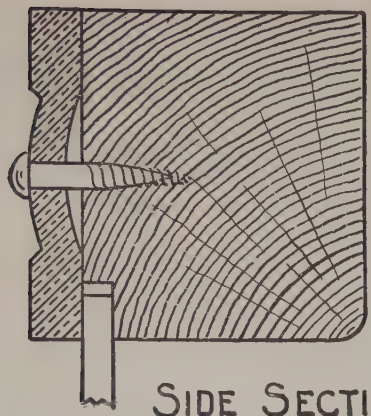

SIDE SECTION

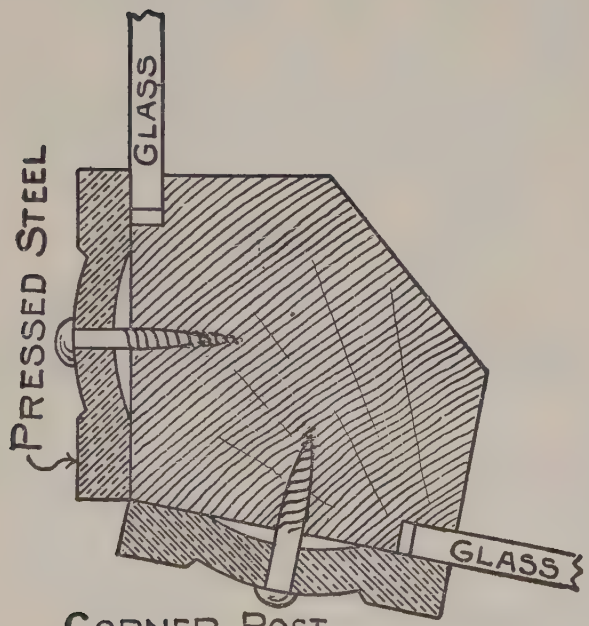

CORNER POST.

FIG. 2.

The side stops are placed on the outside and made secure with round-headed screws. The glass can then be set from the outside, which is much handier to get at, besides the wind pressure against the glass has a solid bearing against the frame itself, the members of which should be glued and put together with screws.

Fig. 2 shows another form quite generally used in the west. The frame work is of wood with the cross-pieces mortised into same and faced with pressed steel fronts of various ornamental patterns, which can be had through most any local hardware dealer. There are a number of patented devices for show window fronts, all possessing more or less good points, but the object in answering the above question is more to show how a satisfactory job may be had by the home workman.

Side Cuts of Various Rafters.

Question: Kindly show several methods of obtaining the side cuts of various rafters?

Answer: We have covered this point in other illustrations, but believe the subject is more clearly set forth in Fig. 1 than in any of the previous single illustrations. In this, 12 on the blade represents the central point from which the angles of the runs for the different polygons are reckoned. The lengths of the respective runs are transferred from the point where they intersect the tongue to a parallel line with the tongue, and at right angles with the starting point from the

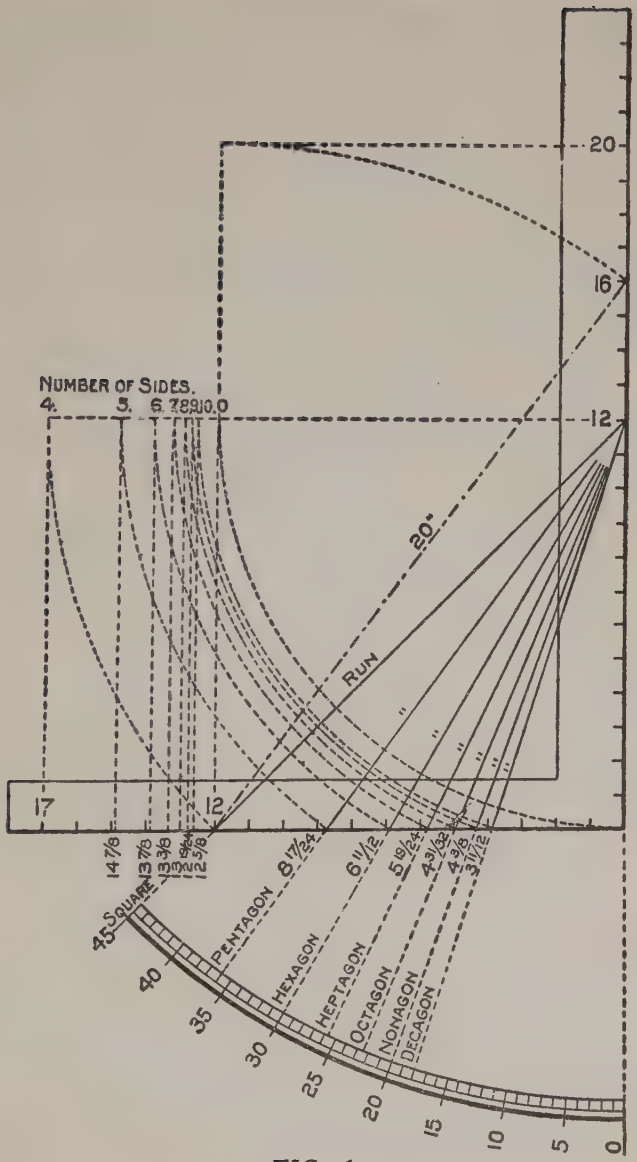
NUMBER OF SIDES.
4. 5. 6. 7. 8. 9. 10.
20
16
12
20°
RUN
17
12
14 7/8
13 7/8
13 3/8
13 1/4
12 7/8
8 17/24
6 11/12
5 19/24
4 31/32
4 3/8
3 11/12
45
40
35
30
25
20
15
10
5
0
SQUARE
PENTAGON
HEXAGON
HEPTAGON
OCTAGON
NONAGON
DECAGON

FIG. 1

blade. The number of sides they represent are indicated on this line by the figures 4, 5, 6, etc. The perpendicular lines from these points to the tongue indicate the points to use on that member for the seat cuts of the different hips. These points, as will be seen, fall in between 12 and 17, and represent the length of the respective runs, with that for a one-foot run of the common rafter, while the figures from the heel to 12 represent the length of the tangents. Here is a beautiful study.

Note: The descent of the tangents is very rapid from 12 for the square down to 3 11-12 for the decagon, or ten-sided building. The more sides the shorter the tangent would be, until finally when they become so short that they are no longer recognized, then the building would be without hips. In other words, it would be round, and consequently its runs rest at zero and its length in 12 inches. This transferred to the parallel line intersects at 0, and the perpendicular line from this point intersects 12 on the tongue, thus showing that the rafters would be the same as for the common rafter for any kind of a building.

Note: There is only three-eighths of an inch difference between the length of run of the decagon and that for the common rafter. Therefore, no difference how many more sides the roof may contain, their lengths would fall in between 12 and 12⅝ on the tongue. This will require pretty close calculation and accuracy on the part of the mechanic. However, it is very rare that examples of this kind come up in actual practice, and,

in fact, may never in a life time, but the theory is correct, and they are worked out along the same lines as for the more common angled corners, such as come up in every-day work.

The triangle is not shown in the illustration, yet it is indirectly represented. The reason for

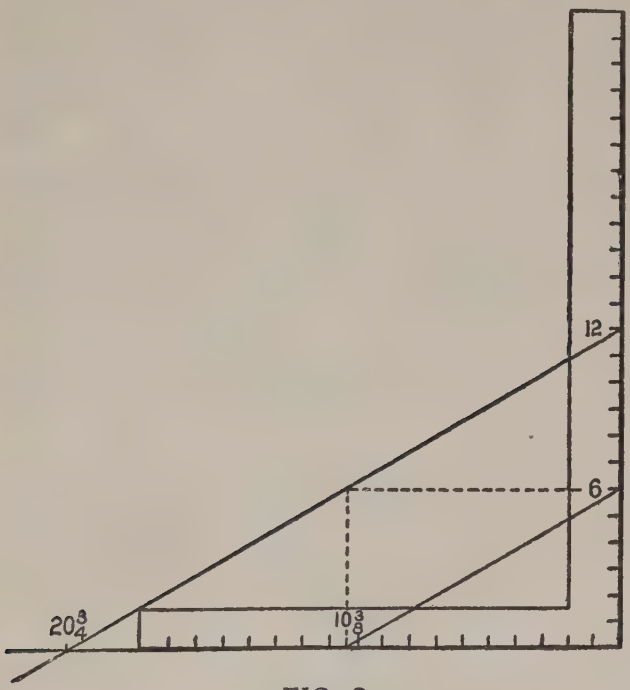

FIG. 2

this is, that the angle of the run falls into the cotangents. The quotient is found to be 60 degrees, and consequently would be beyond 12 on the tongue. In fact, it would not intersect the tongue at all, as its tangent is $20\frac{3}{4}$ inches. Therefore, it

would be necessary to reduce the scale as $10\frac{3}{8}$ and 6, which is a reduction of one-half; and these figures taken on the steel square will give the same results as $20\frac{3}{4}$ and 12.

To illustrate this point further we refer to Fig. 2. Here is the 60-degree line centering at 12, as in the case of the other examples. The intersecting point on the tongue would be at $20\frac{3}{4}$. Now, as this is beyond the length of the tongue, we must use some other figures. Say we wish to take one-half of the above proportions. Then square out 6 inches below 12 on the blade (because 6 is one-half of 12) to a point intersecting the 60-degree line, thence down to the tongue and the line will intersect $10\frac{3}{8}$, which is one-half of $20\frac{3}{4}$. A line from $10\frac{3}{8}$ to 6 will be parallel to the one above and will give the same results. For finding the side cuts, proceed from these points as in the previous figure.

However, we are not through talking about Fig. 1. 12 on the tongue is a pivotal point, because it represents the full scale, or in other words, 12 inches equals one foot. The pitches are reckoned from this point.

For example, we have taken the 2-3 pitch (16 on the blade), then the dotted line from 12 to 16 represents that pitch, and gives the seat and plumb cuts of the common rafter. For the corresponding hips for any of the polygons, it is 16 on the blade, and those for the respective number of sides on the tongue. For the side cut of the jacks it is the length of the common rafter

(20) transferred to the blade and the respective tangent on the tongue; the blade will give the proper angle for the cut. Thus for the side cut

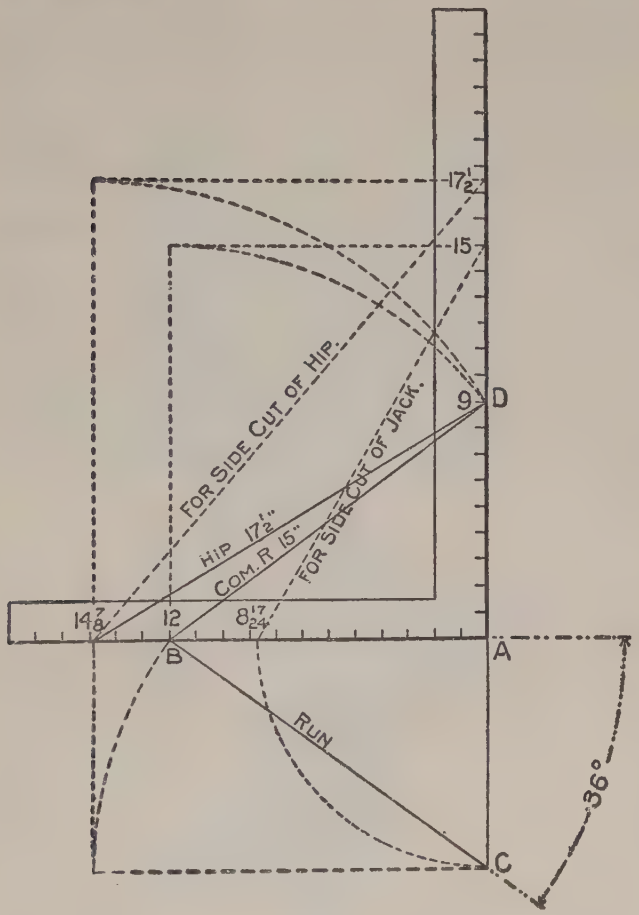

FIG. 3

of the octagon jack it would be 4 31-32 (practically 5) on the tongue and 20 on the blade.

We show in Fig. 3 the 9-inch rise, or 3-9 pitch. for illustrating purposes, and like letters are used to represent the different parts; besides, the dif-

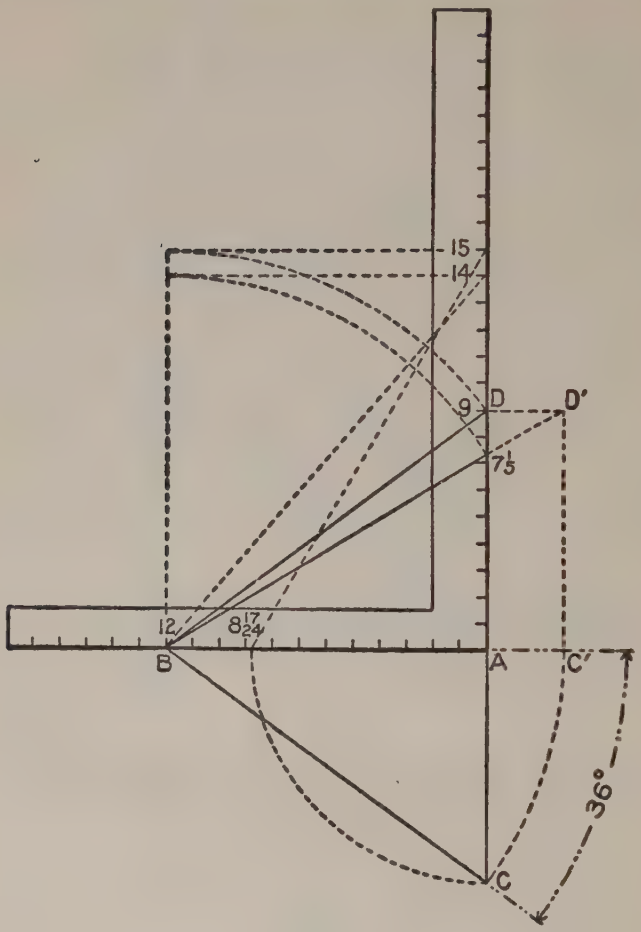

FIG. 4

ferent angles are clearly described, showing just what each angle is for, so that it is not necessary

to enter further into the description of this figure. However, it might be well to show how 12 on the tongue can be used for both the common rafter and hip and yet give the same results though different figures are used on the square to give the cuts for the hip. In other words, 12 and 7 1-5 (see Fig. 4) will give the same results as $14\frac{7}{8}$ and 9; and 12 and 14 will give the same as $14\frac{7}{8}$ and $17\frac{1}{2}$. But the length of the hip should be calculated as from 12 to D′ in comparison to one foot run of the common rafter. Otherwise, if the length is reckoned from 12 to 7 1-15, then this applies to each foot of its own run. As this would require an extra calculation to arrive at the lengths of the individual run of the hip, it is better to use the figures on the tongue (for the hip).

Index to Volume II.

Additions, Porches, etc 19
Angles, Cuts and Bevels for Polygonal Sided Buildings.....216
Another Method of Finding Center of Circle .. 93

Backing Line for Octagon Hip.....109
Bending a Board for a Circle.....143
Bevels, Developing Cuts and 132
Bevels, Lengths and Cuts for Common Rafters.124
Board Measure, Explaining.....174
Board Measure, Lineal.....127
Brace, How to Find Length of.....183
Bridging, Good Method of Cutting.....140

Circular Dome, To Cover a 151
Circular Porch, Framing a 159
Circle, To Bend a Board for a.....143
Circle, To Draw a Polygon in a Given.....146
Circumference of an Ellipse or Oval..... 39
Circumference of Circles of Given Diameters .. 29
Common Rafter, Cuts, Lengths and Bevels of. 124
Concentric Divisions 149
Concentric Parts, Dividing a Circle into 150
Conical Roof, To Cover with Vertical Boarding 154
Constructing an Ordinary Stair 224
Constructing a Pentagon.....196
Correct Shape of a Veneer, To Obtain..... 52

Courses of Shingles for a Roof, To Find the Number.....144
Cut of Valley, Exact Length of.....189
Cuts and Bevels, Developing.....132
Cuts, Lengths and Bevels of Common Rafters 124
Cuts, Lengths and Bevels of Rafters.....100
Cuts, Seat and Plumb.....136
Cutting Bridging, Good Method of.....140
Cutting Rafters.....166
Cutting Rafters with the Square..... 86
Cutting Siding for a Gable.....214

Decmials, Practical Value of..... 58
Describe a Parabola, To..... 34
Describing a Circle with Steel Square..... 32
Determine Center of a Circle..... 17
Determine Proportions of Cylindrical Bodies.. 15
Developing Cuts and Bevels.....132
Distance Across a Body of Water, To Find the 68
Divide a Board into Equal Parts..... 13
Dividing a Circle into a Given Number of Parts..... 56
Dividing a Circle into Three Concentric Parts.150
Dividing a Given Line into any Number of Equal Parts.....147
Dome, To Cover a Circular.....151
Dome, To Cover with Vertical Boarding.....152

Ellipse, To Make an.....142
End Cut of Hip to Rest on Adjoining Roof...163
Equal Parts, Dividing a Given Line into any Number.....147

Exact Length of Cut of Valley.....189
Examples and Rules.....139
Explaining Board Measure.....174

Find Yards of Plastering or Painting..... 12
Finding Circumference of a Circle..... 15
Finding Correct Cuts for Hoppers.....210
Finding Length of Perpendicular..... 57
Finding Radius of a Circle..... 56
Finding Side of a Greatest Square in Circle... 15
Finding Square of Equal Arc to Given Circle . 19
Fitting a Hip Jack.....185
Form a Template, To..... 26
Foundation of Miters..... 57
Fractional Value of Decimals..... 58
Framing a Gambrel Roof.....176
Full Pitch, What Constitutes a..... 80

Gambrel Roof, Framing a.....176
Good Method of Cutting Bridging.....140

Height of a Tree, To Find the..... 69
Heptagon, To Obtain a..... 50
Hexagon, How to Lay Off a.....139
Hexagon Jack.....117
Hexagon, To Make a..... 47
Hip Jack, Fitting a.....185
Hip or Valley, Tail End Cut of 111
Hip Rafter, How to Cut a.....169
Hip Rafters, How to Find Length of.....166
Hip Rafter, Lengths and Cuts of.....172
Hip, Side Cut of.....122
Hip, Side Cut of the.....167

Hip to Rest on Adjoining Roof, End Cut of...163
Hips, Valleys and Jacks, Measurement Line of 106
Hood Rafters, Seat and Plumb Cut of.....167
Hoppers, Finding Correct Cuts.....210
How Square May be Used to Form Ellipses . . 33
How to Frame a Roof 214

Inaccessible Distances, Measuring by Aid of Steel Square..... 66
Intersecting Gable with Eave 216
Irregular Rafters 190

Jack, Hexagon 117
Jacks, Hips and Valleys, Measurement of 106
Jacks, Lengths of..... 87
Jacks, Octagon.....120
Jacks, Side Cut of.....115
Jacks, To Find Side Cuts for the Polygonal...126

Kerfing a Board to Bend Around a Given Circle 157

Laying Off a Stair.....140
Laying Out an Ordinary Stair 206
Length of Braces and Other Timbers 42
Length of Brace, How to Find.....183
Length of Cut of Valley, Exact.....189
Length of Hip Rafters, How to Find.....166
Length of Jacks..... 87
Length of Rafters for Odd Runs 127
Lengths and Cuts of Hip Rafters 172
Lengths, Cuts and Bevels of Common Rafters 124

Lineal Board Measure.....127
Line of Juncture for an Acute Angle 42

Measurement Line of Jacks, Hips and Valleys 106
Measuring Inaccessible Distances 66
Method of Constructing Trestles.....202
Method of Dividing Angles 23
Miter of Equal Joint, To Lay off 39
Mitering a Pentagon 139
Miters for Uneven Pitches 186
Miters, Foundation of..... 57
Moulder's Flask Octagonal, To Make a..... 46
Moulding, Miter Cut on a.....171
Moulding, Proportions of a 154

Obtaining Diagonal of a Parallelogram..... 14
Octagon Hip, Backing Line for.....109
Octagon, How to Lay off on the End of a Timber 139
Octagon in a Square, To Lay off an..... 51
Octagon Jacks.....120
Octagon, To Produce an..... 43
Off Runs, Length of Rafters for.....127
Oval, To Make an.....143

Pentagon, How to Miter.....139
Pentagon or Five-sided Figure, Construction of..... 48
Pitch Lines and Reversed Pitches 76
Pitched Covers, To Cut for 37
Pitches and Degrees..... 74
Pitches, Miters for Uneven 186
Pitches, Steep..... 78

Plancier, Valley Cuts of.....187
Plan of Roof.....101
Plumb and Seat Cuts.....136
Plumb Cut of Rafter.....119
Polygons Inscribed in Circles 55
Polygonal Jacks, To Find Side Cuts for 126
Polygon, To Draw in a Given Circle 146
Porch, Framing a Circular.....159
Porches, Additions, etc..... 93
Proportional Scales 53
Proportions of a Small Moulding 154
Protractor, The 157

Rafter, Plumb Cut of.....119
Rafters, Cuts, Lengths and Bevels of.....100
Rafters, Cutting.....166
Rafters, Length of for Odd Runs.....127
Rafters, Regular and Irregular.....190
Rafters, To Cut with the Square 86
Reduce from One Scale to Another..... 53
Regular and Irregular Rafters 190
Required Opening in a Pitched Roof, To Find 69
Reversed Pitch and Pitch Lines 76
Roof, A Square Pitched.....169
Roof, Conical, To Cover with Vertical Boarding.....154
Roof, Framing a Gambrel 176
Roof Framing, Examples and Explanations on 74
Roof, Plan of.....101
Roof, Simplest Way to Frame a..... 91
Rules and Examples.....139

Seat and Plumb Cuts..... 136
Seat and Plumb Cuts of Hood Rafters 167
Sectional Part of a Circular Frame or Wheel.. 39
Semi-circular Groove, To Make a..... 36
Shingles, To Find Number of Courses for Roof144
Side Cut for Polygonal Jacks 126
Side Cut of Hip.....122
Side Cut of Jacks.....115
Simplest Way to Frame a Roof 91
Square a Tapering Timber, How to.....176
Square-Pitched Roof.....169
Stair, Laying Off a 140
Steep Pitches 78

Tail-end Cut of Hip or Valley.....111
Tapering Timber, To Square a 176
Trestles, Method of Constructing 202
Triangular Building, For a.....110

Uneven Pitches, Miters for 186
Using Square for Ellipses..... 33

Valley Cuts of Plancier.....187
Valley, Exact Length of Cut of.....189
Valley or Hip, Tail-end Cut of 111
Valleys, Hips and Jacks, Measurement Line of 106
Vertical Boarding, To Cover a Circular Dome. 152

What Weight is Required to Balance Lever... 35